THIS DRAWING IS UNPUBLISHED. RELEASED FOR PUBLICATION: -- -- --
© COPYRIGHT -- BY TYCO ELECTRONICS CORPORATION. ALL RIGHTS RESERVED.

UNIT	DATE
AA	22

REVISIONS

#	LTR	DESCRIPTION	DATE	DR	APVD
	B	REV PER ECO-08-012146	23APR2008	VL	TX

MECHANICAL:

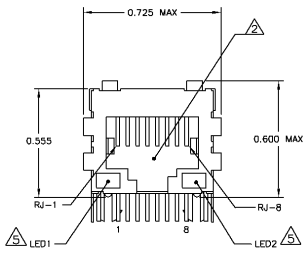

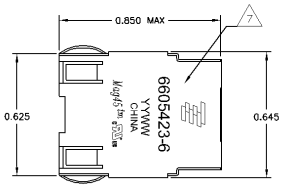

426 SERIES MAGNETIC CIRCUIT 3 6

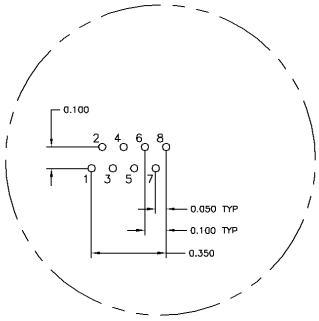

Pin Designations

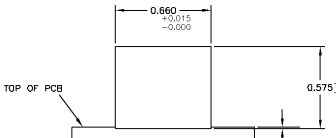

Suggested Panel Cutout

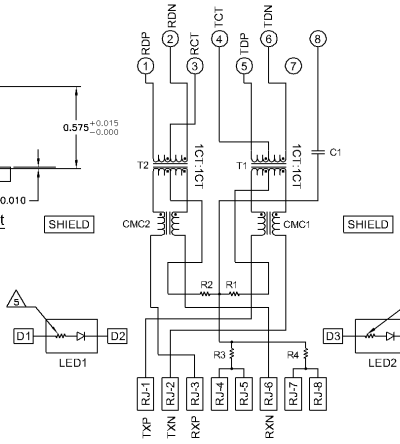

C1 = 1000 pF, 2kV CAPACITOR

R1-R4 = 75 OHMS, 1/16W RESISTORS

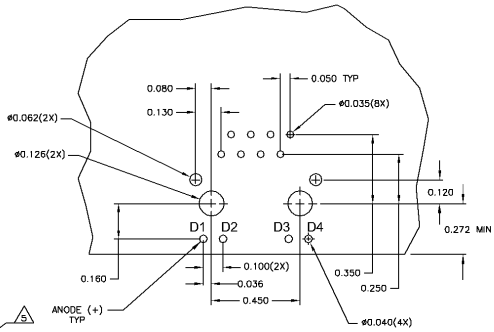

Suggested PCB Layout
(Component Side)

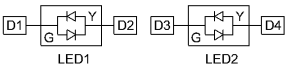

LED1 LED2

BI-COLOR LED CONFIGURATION
FOR 6605423-6 ONLY

NOTES:

1. MATERIALS:
HOUSING - THERMOPLASTIC PET POLYESTER FLAMMABILITY RATING UL 94V-0.
SHIELD - 0.010" THICK, C26800 BRASS PREPLATED WITH 30µINCH MIN SEMI-BRIGHT NICKEL. SOLDER TABS POST DIPPED WITH 100µINCH MIN SAC SOLDER.
MOD JACK CONTACTS - 0.0157" X 0.018" PHOSPHOR BRONZE, 50µINCH MIN OVERALL NICKEL UNDERPLATE WITH SELECT 50µINCH MIN HARD GOLD FINISH PLATE.
SOLDERTAILS WITH 100µINCH MIN MATTE TIN AND/OR SAC SOLDER DIP.
LIGHT EMITTING DIODE(LED) - DIFFUSED EPOXY LENS, 0.020" X 0.020" CARBON STEEL WIREFRAME LEADS PRE-PLATED WITH 80µINCH SILVER OVER 40µINCH NICKEL UNDERPLATE OVER 40µINCH COPPER UNDERPLATE. POST-PLATED WITH 100µINCH MIN MATTE TIN AND/OR SAC SOLDER DIP OR PURE TIN SOLDER DIP.

2. RJ45 JACK CAVITY CONFORMS TO FCC RULES AND REGULATIONS PART 68, SUB PART F.

3. MAGNETICS
- IMPEDANCE: 100 OHMS
- TURNS RATIO (CHIP: CABLE): TX = 1:1, RX = 1:1
- OPEN CIRCUIT INDUCTANCE (OCL): 350µH MIN @100kHz, 0.1VRMS, 8mADC BIAS FROM 0°C TO 70°C, TX AND RX
- PERFORMANCE @ 25°C:
  INSERTION LOSS (IL): 1.1dB MAX FROM 0.5MHz TO 100MHz
  RETURN LOSS (RL): 18dB MIN FROM 0.5MHZ TO 30MHz
  18-20LOG(f/30)dB MIN FROM 30.1MHz TO 60MHz
  12dB MIN FROM 60.1MHz TO 80MHz
  CROSSTALK ATTENUATION: 35dB MIN FROM 0.5MHz TO 40MHz
  33-20×LOG(f/50)dB MIN FROM 40.1MHz TO 100MHz
  COMMON MODE REJECTION RATIO (CMRR): 30dB MIN FROM 0.5MHz TO 100MHz
- ISOLATION VOLTAGE: COMPLIES WITH IEEE802.3 2002, PARA 23.5.1.1, ITEM b.

4. OPERATING TEMPERATURE: FROM 0° - +70°C

5. THE 250 OHM LED RESISTORS ARE OPTIONAL, PLEASE SEE CHART FOR PRESENCE OR ABSENCE OF LED RESISTORS. IF THE LED WITHOUT 250 OHM RESISTORS, LED IS DRIVEN WITH CONSTANT CURRENT AT APPROX 20mA.
LED COLOR: DOMINANT WAVELENGTH (λD): GREEN 568 nm TYP. at IF=20mA
FORWARD VOLTAGE (VF): GREEN 2.2V TYP. at IF=20mA
DOMINANT WAVELENGTH (λD): YELLOW 588 nm TYP. at IF=20mA
FORWARD VOLTAGE (VF): YELLOW 2.1V TYP. at IF=20mA
IF THE LED WITH 250 OHM RESISTORS,LED IS DRIVEN WITH 5V VOLTAGE AND THE MAX OPERATING CURRENT IS 20mA.
LED COLOR : DOMINANT WAVELENGTH (λD): GREEN 568 nm TYP. At VF=5V
FORWARD CURRENT (IF): GREEN 12 mA TYP. at VF=5V
DOMINANT WAVELENGTH (λD): YELLOW 588 nm TYP. At VF=5V
FORWARD CURRENT (IF): YELLOW 13 mA TYP. at VF=5V

6. INDICATED CONNECTIONS ARE FOR NIC CONFIGURATION. THE MAGNETICS ARE SYMMETRICAL, AND THEREFORE SUPPORT AUTO-MDI/MDIX.

7. TYCO ELECTRONICS LOGO, PART NUMBER, DATE CODE, COUNTRY OF ORIGIN AND AGENCY APPROVAL MARKING IN APPROXIMATE LOCATION SHOWN.

8. THESE PARTS ARE RECOMMENDED FOR WAVE SOLDERING PROCESS, PEAK WAVE SOLDERING TEMPERATURE IS 265°C MAX, 10 SECONDS MAX.

YES	GREEN	YES	GREEN	YES	6-6605423-1
YES	GREEN	YES	YELLOW	YES	5-6605423-1
NO	GREEN	YES	GREEN	YES	1-6605423-1
NO	GREEN	NO	GREEN	NO	6605423-7
NO	GREEN/YELLOW	NO	GREEN/YELLOW	NO	6605423-6
DECOUPLING CAPACITOR	LED1 5	250 OHMS RESISTOR	LED2 5	250 OHMS RESISTOR	PART NUMBER

THIS DRAWING IS A CONTROLLED DOCUMENT.

DIMENSIONS: INCHES

TOLERANCES UNLESS OTHERWISE SPECIFIED: 1 PLC ± .1, 2 PLC ± .05, 3 PLC ± .010, 4 PLC ± .005, 5 PLC ± .001, ANGLES ± 0°

MATERIAL 1 FINISH 1

DR G. ATTAOIA – 08DEC03 CHK D. FAROLE – 08MAR2005 APD D. FAROLE – 08MAR2005 PRODUCT SPEC 108-2100 APPLICATION SPEC — WEIGHT —

Tyco Electronics Corporation
Tyco Electronics Harrisburg, PA 17105-3608

NAME 1X1 MAG45(TM), 4N2 SCHEMATIC, 426 SERIES CIRCUIT, SHIELDED, OPTIONAL DECOUPLING CAPACITOR, WITH LEDS

SIZE A1 CAGE CODE 00779 DRAWING NO C-6605423 RESTRICTED TO —

CUSTOMER DRAWING SCALE NTS SHEET 1 OF 1 REV B

Downloaded from Elcodis.com electronic components distributor