THIS DRAWING IS UNPUBLISHED. RELEASED FOR PUBLICATION .19 .
© COPYRIGHT 19 BY AMP INCORPORATED. ALL RIGHTS RESERVED.

LOC	DIST
AA	22

REVISIONS

Y	LTR	DESCRIPTION	DATE	DWN	APVD
	J	REVISED PER EC 0511-0104-02	30JUL02	DD	BK

1. DIMENSIONS ARE MAXIMUM UNLESS OTHERWISE SPECIFIED.
2. CAVITY CONFORMS TO FCC RULES AND REGULATIONS PART 68, SUBPART F.
3. MATERIAL: HOUSING - PBT POLYESTER, BLACK. TERMINAL - PHOSPHOR BRONZE PLATED WITH 1.27µm [.000050] MINIMUM THICK HARD GOLD IN LOCALIZED GOLD PLATE AREA AND 3.81µm [.000150] MINIMUM THICK TIN-LEAD IN SOLDER AREA OVER 1.27µm [.000050] MINIMUM THICK NICKEL UNDERPLATE.
4. BULK PACKAGED IN A TRAY.

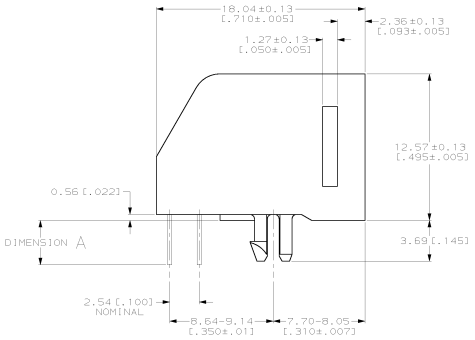

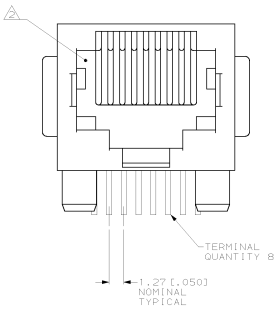

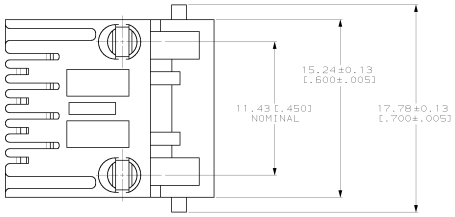

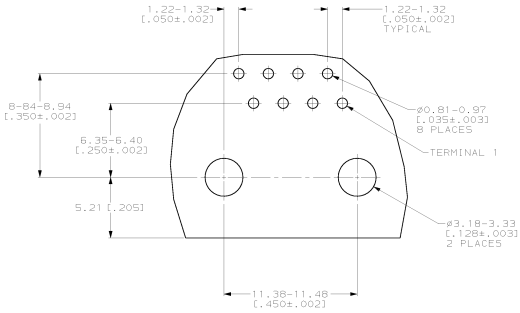

SUGGESTED PRINTED CIRCUIT BOARD
MOUNTING HOLE LAYOUT
(LAYOUT SHOWN FROM CIRCUIT SIDE OF BOARD)

SUPERSEDED BY 555162-1			
	4	2.54-3.05[.11±.01]	555162-4
	4	3.30-4.32[.15±.02]	555162-1
PACKAGED		DIMENSION A	PART NUMBER

THIS DRAWING IS A CONTROLLED DOCUMENT.

DIMENSIONS: mm[INCHES]

TOLERANCES UNLESS OTHERWISE SPECIFIED:
2 PLC ±-
3 PLC ±-
4 PLC ±-
5 PLC ±-
ANGLES ±-

MATERIAL 3 - FINISH 3 -

DWN SPRINKLE 30MAY96
CK WHITT 30MAY96
APVD J. TONEY 23MAY96
PRODUCT SPEC 108-1163
APPLICATION SPEC 114-2048
WEIGHT -
CUSTOMER DRAWING

AMP
TYCO Electronics
Harrisburg, PA 17105-3608

NAME MODULAR JACK ASSEMBLY, 8 POSITION, LOW PROFILE, RIGHT ANGLE, WITH PANEL STOPS

SIZE A1 CAGE CODE 00779 DRAWING NO C-555162 RESTRICTED TO -

SCALE 6:1 SHEET 1 OF 1 REV J

AMP 4805 REV 11.XMB7

30-JUL-02 12:42:42 amp3005l /home/amp3005l/edmod

Downloaded from Elcodis.com electronic components distributor