REVISION RECORD				
REV	ECO	DESCRIPTION	DRFT	CHKD
1		ERASE P/N	YANGLAN 7/01/'05	
2		MODIFY NOTE&DIMENSION	Rik 06/16/06'	

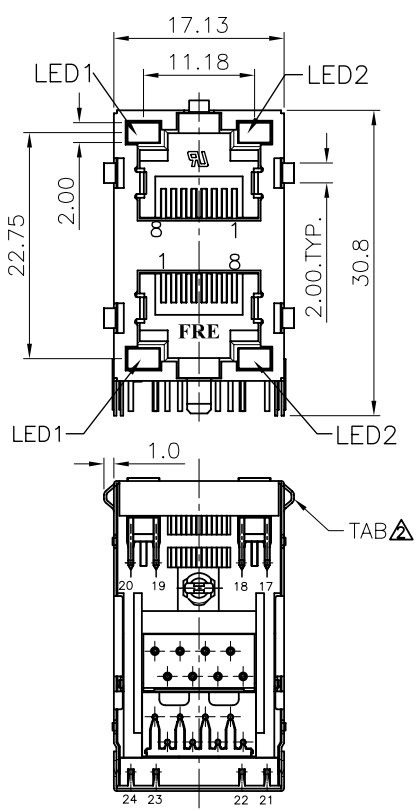

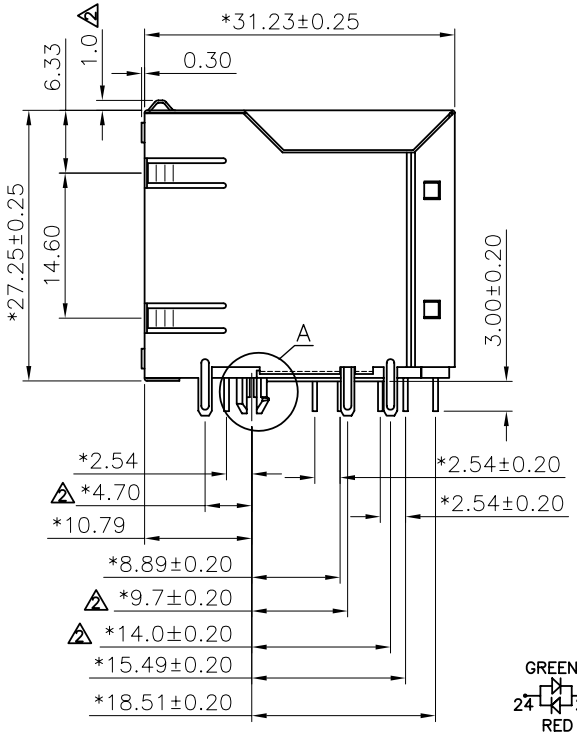

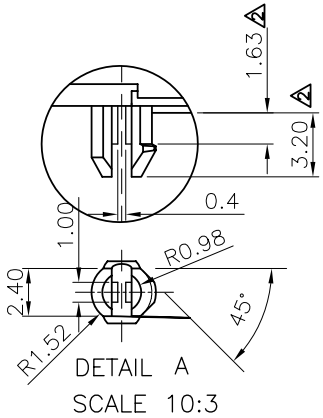

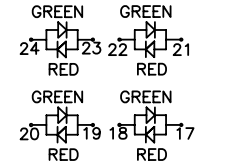

FOR P/N:E5J88-D4LXFX-L

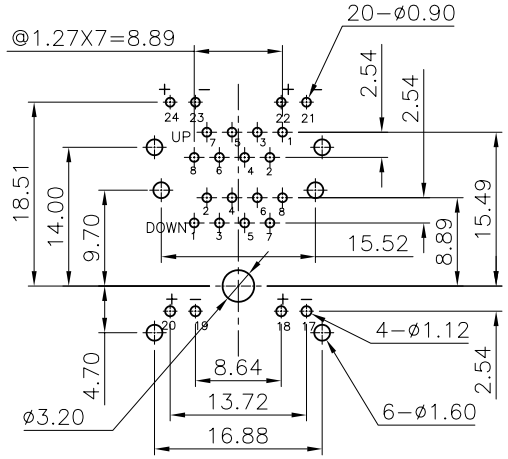

PC Board Layout t=1.6mm
Component Side Shown

NOTES:

ELECTRICAL:

1. VOLTAGE RATING : 125 VAC RMS.
2. CURRENT RATING : 1.5 AMP.
3. CONTACT RESISTANCE : 50 MILLIOHMS MAX.
4. INSULATION RESISTANCE: 1000 MEGOHMS MIN @ 500 VDC.
5. DIELECTRIC STRENGTH : 1000 VAC RMS 60Hz, 1MIN.

MECHANICAL:

1. HOUSING MATERIAL : NYLON+30%G.F. UL94V-0. 2
2. CONTACT MATERIAL : PHOSPHOR BRONZE ø0.46mm.
3. PLATING : 1: CONTACT AREA- SELECTIVE GOLD PLATING.
   2: TAILS- 150u" TIN MIN OVER 50u" NICKEL. 2
4. OPERATING LIFE : 750 CYCLES MIN.
5. PCB RETENTION PRE-SOLDER : 1 LB MIN.
6. PCB RETENTION POST-SOLDER: 10 LBS MIN.
7. LED COLOR : OPTION 2

ENVIRONMENTAL:

1. STORAGE : -40°C TO +85°C.
2. OPERATION: -40°C TO +85°C.
3. WAVE SOLDERING TEMERRATURE: 255~265°C(5~10 SECONDS) 2
4. RoHS Compliant/RoHS 6.

MATES WITH MODULAR PLUG CONFORMING TO
FCC PART 68, SUBPART F.

ROHS PART NUMBER: E5J88-XXL3FX-L 1

A-LED1:GREEN, LED2:GREEN
B-LED1:GREEN, LED2:ORANGE
C-LED1:GREEN, LED2:YELLOW
L-LED1:YELLOW, LED2:GREEN
D-LED1:G+R, LED2:G+R
F-LED1:ORANGE, LED2:GREEN

GOLD OPTION:
1- 3u" 2- 6u" 3-15u"
4-30u" 5-50u"

1- NO TAB
4- TOP TABS & SIDE TABS

RoHS Compliant/RoHS 6

DETACHED LISTS	MM (INCH)	DFTO YANGLAN	DATE 05/26/'05
	TOLERANCES EXCEPT AS NOTED	CHKD	DATE
	MM .0 ±0.20 ±	MFO	DATE
	.00 ±0.15 ±	APPVL	DATE
	.000 ±0.075 ±	MATERIAL :	
	ANGLES ±	QT'Y :	
	THIRD ANGLE PROJECTION	FINISH :	
		SCALE : 5:3	

FULL RISE ELECTRONIC CO., LTD

TITLE RJ45(LED)
STACKED GANGED JACK, 2X1

DRAWING NO. GE5J3021-LA
/PART NO. SEE NOTE
SIZE A3
REV 2 06/16/06'
DO NOT SCALE DRAWING
SHEET 1 OF 1

Downloaded from Elcodis.com electronic components distributor