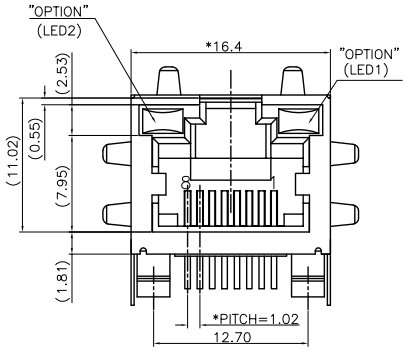

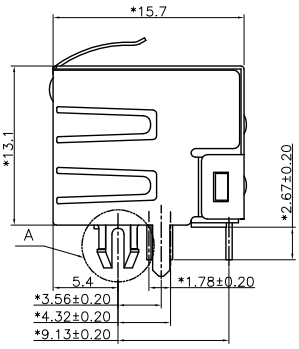

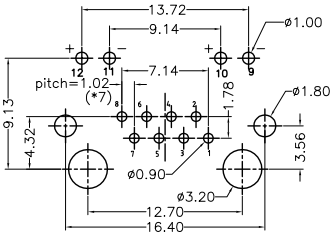

PC Board Layout t=1.60mm
Component Side Shown Tolerance±0.05mm

NOTES:

ELECTRICAL:

1. VOLTAGE RATING : 125 VAC RMS.
2. CURRENT RATING : 1.5 AMP.
3. CONTACT RESISTANCE : 30 MILLIOHMS MAX.
4. INSULATION RESISTANCE: 1000 MEGOHMS MIN @ 500 VDC.
5. DIELECTRIC STRENGTH : 1000 VAC RMS 60Hz, 1MIN.
6. LED RATINGS: FORWARD VOLTAGE: 2.2 VOLTS TYPICAL.
   REVERSE VOLTAGE: 5 VOLTS MINIMUM.
7. OPERATING: 750 CYCLES MIN.

MECHANICAL:

1. HOUSING MATERIAL : GLASS FILLED NYLON UL94-0 COLOR-BLACK
2. INSERT MATERIAL : GLASS FILLED NYLON UL94-0 COLOR-BLACK
3. BACK PLATE MATERIAL : GLASS FILLED NYLON UL94-0 COLOR-BLACK
4. LED SIZE : 3.2*2.0*7.0*P=2.54mm.
5. SHIELD MATERIAL : GOLD PLATING OVER NICKEL.
6. CONTACT MATERIAL : COPPER ALLOY 0.25mm THICKNESS PLATING NI.
7. PLATING : PHOSPHOR BRONZE 0.35mm THICKNESS OR ø0.46mm.
8. PCB RETENTION PRE-SOLDER : 1 LB MIN.
9. PCB RETENTION POST-SOLDER: 10 LBS MIN.

ENVIRONMENTAL:

1. STORAGE TEMPERATURE : -40°C TO +85°C.
2. OPERATION TEMPERATURE: -40°C TO +85°C.
3. WAVE SOLDERING TEMPERATURE: 255~265° (5~10 SECONDS)
4. RoHS COMPLIANT.

MATES WITH MODULAR PLUG CONFORMING TO
FCC PART 68, SUBPART F.
CUL FILE No:E163191

PART NUMBER	LED COLOR		TAB	GOLD PLATING
	LED 1	LED 2		
E5J88-11LJ22-L	GREEN	YELLOW	NO TAB	6u"
E5J88-14LJ22-L	GREEN	YELLOW	TOP TABS & SIDE TABS	6u"
E5J88-14LJ23-L	GREEN	YELLOW	TOP TABS & SIDE TABS	15u"
E5J88-21LJ22-L	GREEN	GREEN	NO TAB	6u"
E5J88-31LJ22-L	YELLOW	GREEN	NO TAB	6u"
E5J88-31LJ23-L	YELLOW	GREEN	NO TAB	15u"
E5J88-34LJ22-L	YELLOW	GREEN	TOP TABS & SIDE TABS	6u"
E5J88-34LJ23-L	YELLOW	GREEN	TOP TABS & SIDE TABS	15u"
E5J88-54LJ22-L	RED	GREEN	TOP TABS & SIDE TABS	6u"

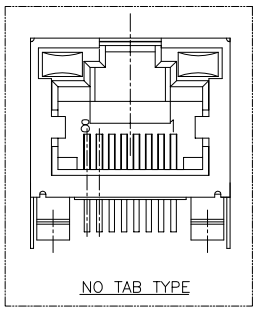

NO TAB TYPE

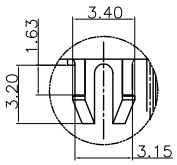

DETAIL "A"
SCALE 1.5:1

MM (INCH)
TOLERANCES EXCEPT AS NOTED
MM
.0 ± 0.2 ±
.00 ± 0.15 ±
.000 ± 0.075 ±
ANGLES ± 0.5
DETACHED LISTS
THIRD ANGLE PROJECTION

RoHS Compliant

Pulse A TECHNITROL COMPANY

TITLE
RJ45 SIDE ENTRY LED JACK

DFTO Cathy
DATE 2006/09/20
SCALE : 3:1
DRAWING NO. CE5J3015-LA
/PART NO. SEE TABLE
DO NOT SCALE DRAWING
SIZE A3
REV 0
SHEET 1 OF 1

Downloaded from Elcodis.com electronic components distributor