D1RFRD006

REVISION RECORD				
REV	ECO	DESCRIPTION	DRFT	CHKD
1		NOTES MODIFY	ANKUE 06/22/05	

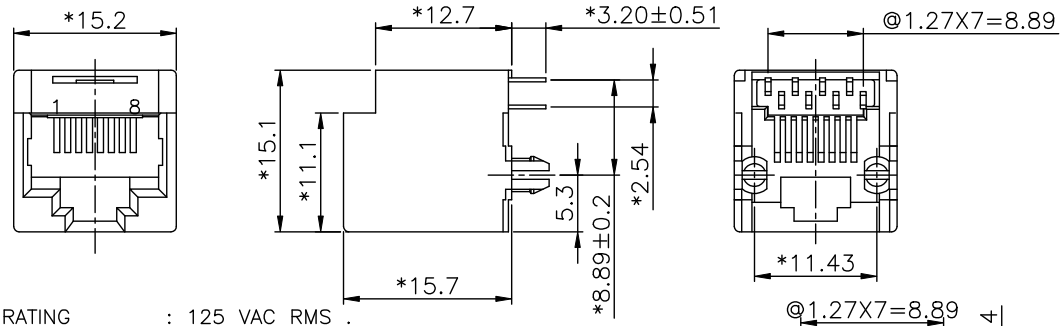

NOTES:

ELECTRICAL:

1. VOLTAGE RATING : 125 VAC RMS .
2. CURRENT. RATING :1.5 AMP .
3. CONTACT RESISTANCE : 30 MILLIOHMS MAX.
4. INSULATION RESISTANCE : 1000 MEGOHMS MIN @ 500 VDC.
5. DIELECTRIC STRENGTH : 1000 VAC RMS 60Hz, 1MIN.

MECHANICAL:

1. HOUSINGE MATERIAL : PBT+30% 94V-0 OR NYLON+25% 94V-0
2. CONTACT MATERIAL : PHOSPHOR BRONZE. t=0.35mm
3. PLATING : GOLD PLATING OVER NICKEL.
4. OPERATING LIFE : 750 CYCLES MIN.
5. PCB RETENTION PRE-SOLDER: 1 LB MIN.
6. PCB RETENTION POST-SOLDER: 10 LBS MIN.

ENVIRONMENTAL:

1. STORAGE: -40°C TO +85°C.
2. OPERATION: -40°C TO +85°C.
3. WAVE SOLDER TEMPERTURE:230-250°C(3-5 SECOND).

⚠ PART NUMBER:E5288-700X4X-L

- 1- 3u" 2- 6u" 3-15u" 4-30u" 5-50u"
- 0-A06-0100 BK C-A05-0040 BK

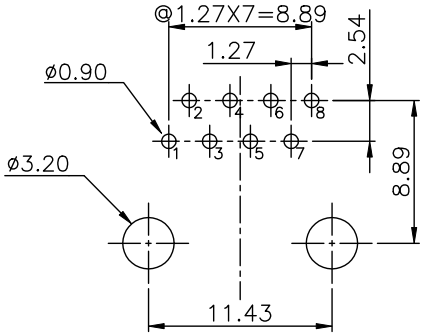

RECOMMENDED HOLE PATTERN
(COMPONENT SIDE VIEW)

MM (INCH)	DFTO SAMMY	DATE 06/21/05'	FULL RISE ELECTRONIC CO., LTD
TOLERANCES EXCEPT AS NOTED	CHKD JAKE	DATE 2005/08/22	
	MFO	DATE	
MM .0 ± 0.2 ± .00 ± 0.15 ± .000 ± 0.075 ±	APPV LLUSHENG	DATE 2005/08/22	TITLE RJ45 TOP ENTRY PCB JACK (DIP TYPE)
	MATERIAL :		
ANGLES ± 0.5	QT'Y :		DRAWING NO. GE523031-LC / PART NO. SEE NOTE — SIZE A3 — REV 1
THIRD ANGLE PROJECTION	FINISH :		
	SCALE : 3:1		DO NOT SCALE DRAWING — SHEET OF

DETACHED LISTS

Downloaded from Elcodis.com electronic components distributor