THIS DRAWING IS UNPUBLISHED. RELEASED FOR PUBLICATION -.- .
© COPYRIGHT - BY TYCO ELECTRONICS CORPORATION. ALL RIGHTS RESERVED.

LOC	DIST
AA	22

REVISIONS

P	LTR	DESCRIPTION	DATE	DWN	APVD
	B	ECR-08-031628	9FEB2009	AZ	SY

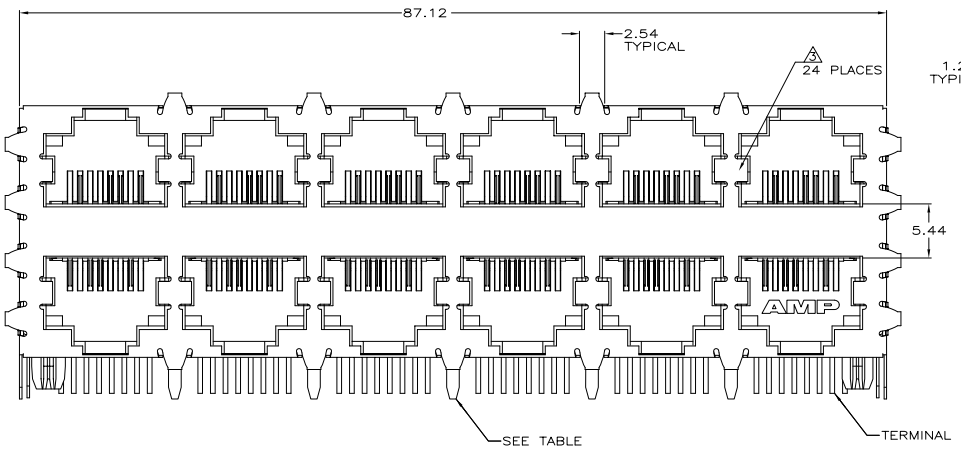

PN 6116000-2 & -3 SHOWN

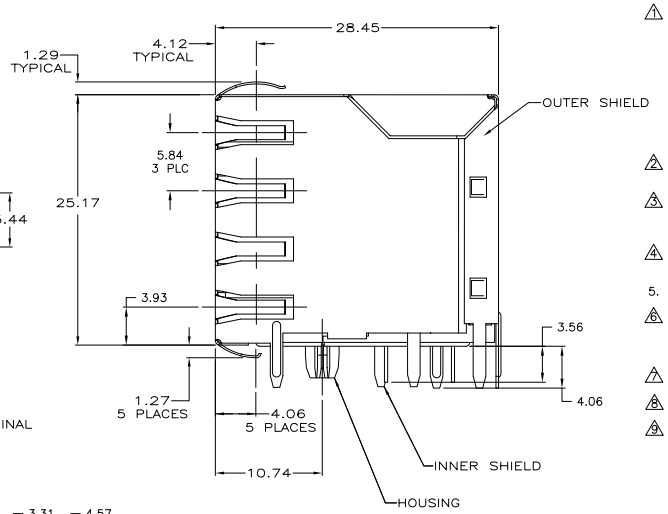

1. MATERIAL: HOUSING – PCT POLYESTER, BLACK, UL 94V-0. OVERMOLDED TERMINAL ARRAY – PBT, BROWN. TERMINALS – 0.33 [.013] THICK PHOSPHOR BRONZE PLATED WITH 1.27µm [.000050] MIN THICK HARD GOLD IN LOCALIZED AREA AND 3.81µm [.000150] MIN THICK MATTE TIN IN SOLDER AREA OVER 1.27µm [.000050] MIN THICK NICKEL UNDERPLATE. OUTER SHIELD: 0.196 [.0077] THICK COPPER ALLOY PLATED 1.27µm [.000050] MIN NICKEL, PCB GROUND TABS DIPPED WITH 2.03µm [.000080] MIN TIN.
2. JACK CAVITY CONFORMS TO FCC RULES AND REGULATIONS, PART 68 SUBPART F.
3. INNER SHIELD TABS FINAL FORMED AND SIZED BY MATING WITH MODULAR PLUGS TO REDUCE INITIAL MATING INSERTION FORCE. APPLIES TO PN 6116000-1 & -4 ONLY.
4. USE #30 DRILL BIT OR 3.25mm DRILL BIT WHEN PRODUCING THESE PCB HOLES.
5. ALL DIMENSIONS NOMINAL UNLESS OTHERWISE SPECIFIED.
6. DATE CODE LOCATED ON REAR OF PART APPROX AS SHOWN: FIRST 2 DIGITS ARE LAST 2 DIGITS OF YEAR, SECOND 2 DIGITS ARE MANUFACTURING WORK WEEK, LAST DIGIT IS DAY OF WEEK, WITH SUNDAY=1.
7. THE DIELECTRIC TAPES ARE ONLY FOR PN 6116000-4.
8. THE PN 6116000-4 IS PRELIMINARY.
9. DIELECTRIC WITHSTANDING VOLTAGE: 2250 VDC BETWEEN CONTACT AND SHIELD.

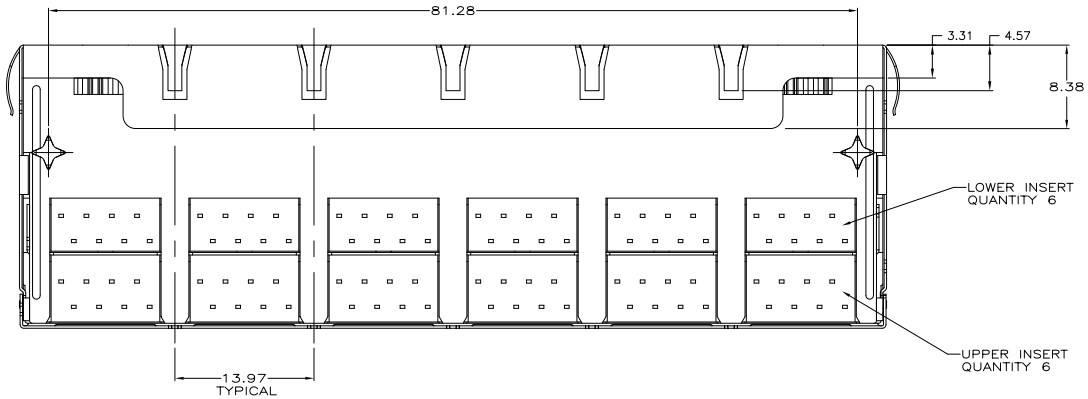

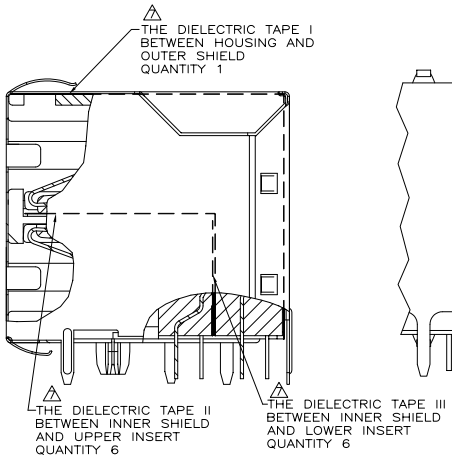

SECTION VIEW
ONLY FOR PN 6116000-4

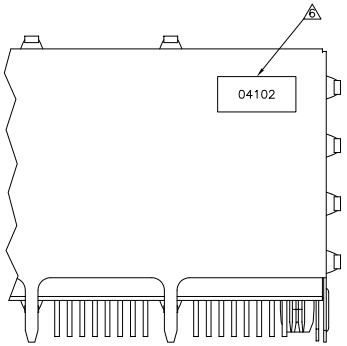

PARTIAL REAR VIEW

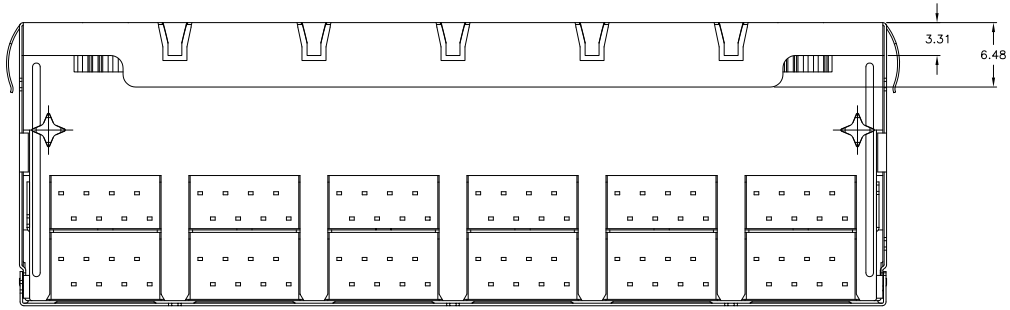

PN 6116000-1 & -4 SHOWN
(WITH SHORT BOTTOM PANEL GROUND TABS AND 3 REAR TABS)

1 SHIELD PLATING	HOLES USED	NO. OF REAR TABS	PART NUMBER
NICKEL	A,C,E	3	3 6116000-4 8 9
NICKEL	A,B,C,D,E	5	6116000-3
NICKEL	A,B,C,D,E	5	6116000-2
NICKEL	A,C,E	3	3 6116000-1

THIS DRAWING IS A CONTROLLED DOCUMENT.

DIMENSIONS: mm

TOLERANCES UNLESS OTHERWISE SPECIFIED:
0 PLC ± 0.13
1 PLC ± 0.13
2 PLC ± 0.13
3 PLC ± 0.13
4 PLC ± 0.13
ANGLES ± -

MATERIAL 1
FINISH 1

DWN 08JUN2005 L. VARELA – DOCKS
CHK 08JUN2005 J. WESTMAN
APVD 08JUN2005 S. FLICKINGER

PRODUCT SPEC 108-1163-2
APPLICATION SPEC 114-2048
WEIGHT –

Tyco Electronics
Tyco Electronics Corporation
Harrisburg, PA 17105-3608

NAME: STACKED MODULAR JACK ASSEMBLY, 2x6 PORT, RJ45, SHIELDED, WAVE PANEL GROUNDS, CAT 5/GIGABIT ETHERNET

SIZE A1 | CAGE CODE 00779 | DRAWING NO C-6116000 | RESTRICTED TO –

CUSTOMER DRAWING | SCALE 4:1 | SHEET 1 OF 2 | REV B

AMP 4805 REV 31MAR2000

Downloaded from Elcodis.com electronic components distributor

THIS DRAWING IS UNPUBLISHED. RELEASED FOR PUBLICATION -,- .
© COPYRIGHT - BY TYCO ELECTRONICS CORPORATION. ALL RIGHTS RESERVED.

LOC	DIST
AA	22

REVISIONS

P	LTR	DESCRIPTION	DATE	DWN	APVD
	–	SEE SHEET 1	–	–	–

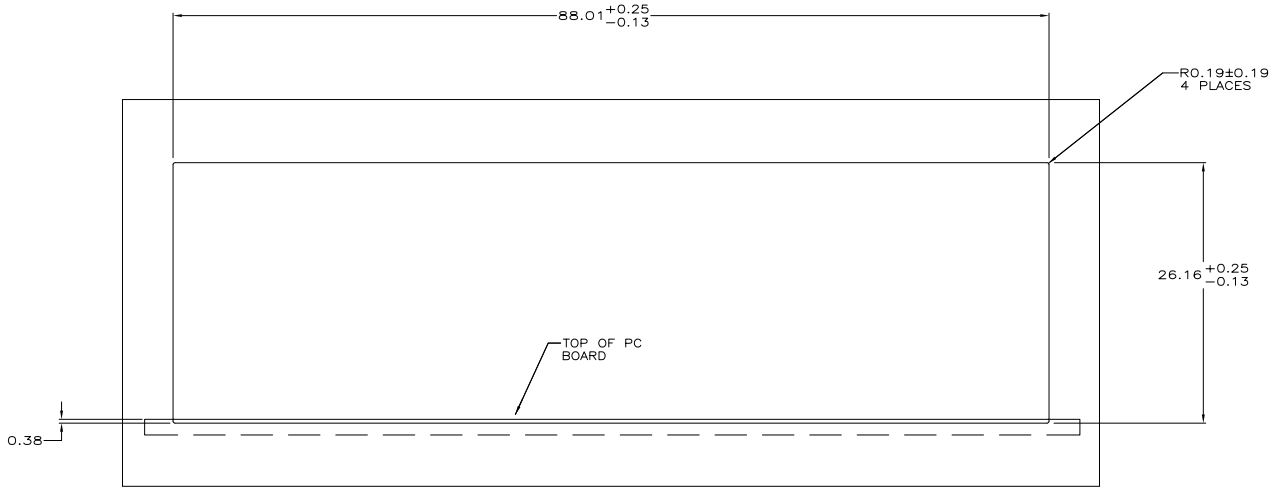

SUGGESTED PANEL CUTOUT DIMENSIONS

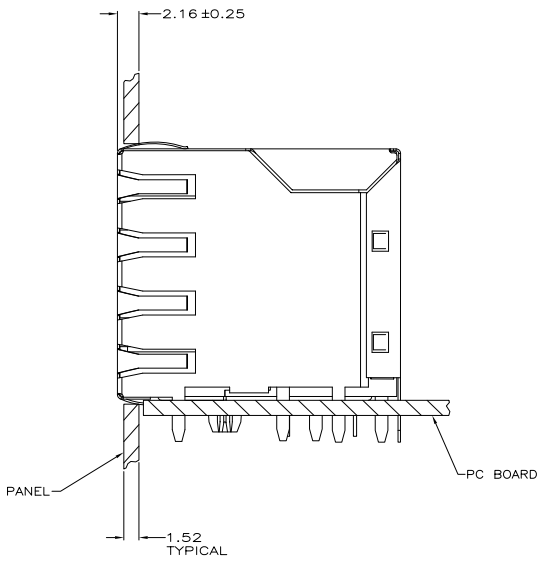

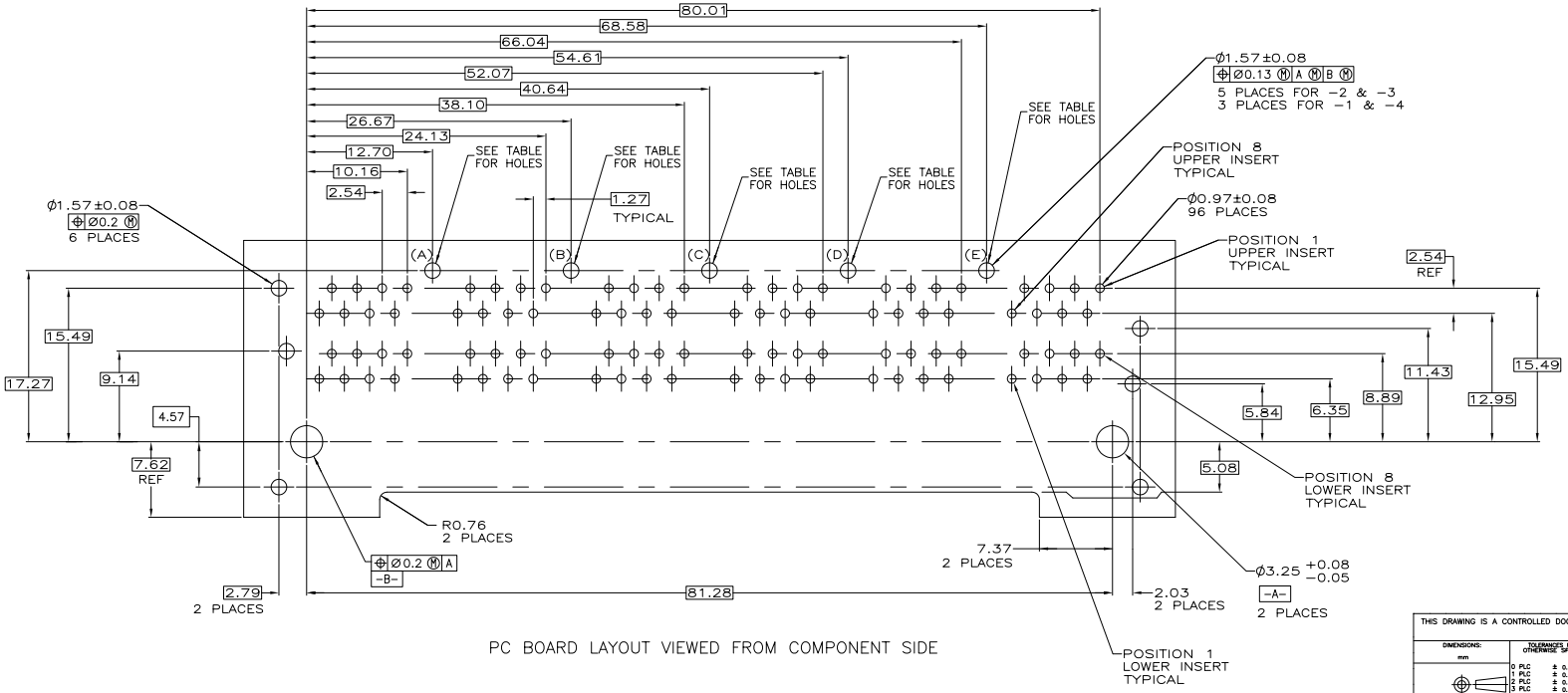

PC BOARD LAYOUT VIEWED FROM COMPONENT SIDE

THIS DRAWING IS A CONTROLLED DOCUMENT.

DIMENSIONS: mm

TOLERANCES UNLESS OTHERWISE SPECIFIED:
0 PLC ± 0.13
1 PLC ± 0.13
2 PLC ± 0.13
3 PLC ± 0.13
4 PLC ± 0.13
ANGLES ± –

MATERIAL 1
FINISH 1

DWN L. VARELA – DOCKS 08JUN2005
CHK J. WESTMAN 08JUN2005
APVD S. FLICKINGER 08JUN2005
PRODUCT SPEC 108-1163-2
APPLICATION SPEC 114-2048
WEIGHT –

Tyco Electronics
Tyco Electronics Corporation
Harrisburg, PA 17105-3608

NAME
STACKED MODULAR JACK ASSEMBLY,
2x6 PORT, RJ45, SHIELDED, WAVE PANEL
GROUNDS, CAT 5/GIGABIT ETHERNET

SIZE	CAGE CODE	DRAWING NO	RESTRICTED TO
A1	00779	C-6116000	–

CUSTOMER DRAWING SCALE 4:1 SHEET 2 OF 2 REV B

AMP 4805 REV 31MAR2000

Downloaded from Elcodis.com electronic components distributor