THIS DRAWING IS UNPUBLISHED. RELEASED FOR PUBLICATION -.-.-
© COPYRIGHT - By -. ALL RIGHTS RESERVED.

UOC	DIST
HM	00

REVISIONS

P	LTR	DESCRIPTION	DATE	DRN	APVD
	C1	REVISED PER ECO-11-005033	25MAR11	RK	HMR

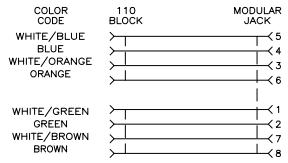

ELECTRICAL SCHEMATIC
T568A

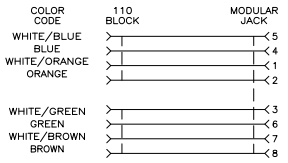

ELECTRICAL SCHEMATIC
T568B

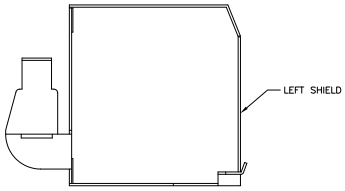

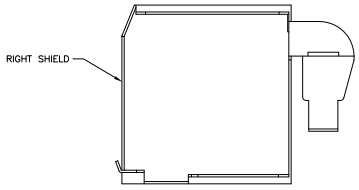

1. MATERIAL: HOUSING – POLYPHENYLENE OXIDE, 94V–0 RATED. BLACK.
110 BLOCKS – POLYCARBONATE, 94V–0 RATED.
JACK CONTACTS – PHOSPHOROUS BRONZE, PLATED WITH 1.27µm [.000050] MINIMUM THICK GOLD IN LOCALIZED AREA AND 3.81µm [.000150] MINIMUM THICK MATTE TIN IN SOLDER AREA OVER 1.27µm [.000050] MINIMUM THICK NICKEL UNDERPLATE.
SHIELDS– NICKEL PLATED BRASS.

2. 110 BLOCK WILL TERMINATE 22–26 AWG SOLID OR 7 STRAND CONDUCTORS, 1.27 [.050] MAXIMUM INSULATION DIAMETER.

3. MOUNTING PANEL THICKNESS 1.473 – 1.600 [.058 – .063].

4. LEFT AND RIGHT SHIELDS SHIPPED NOT ASSEMBLED.

5. CAVITY CONFORMS TO FCC RULES AND REGULATIONS PART 68 SUBPART F REQUIREMENTS.

6. THESE TWO SUGGESTED CUTOUT OPENINGS ARE USED IN TANDEM WITH DUAL FRONT AND BACK CUTOUTS.

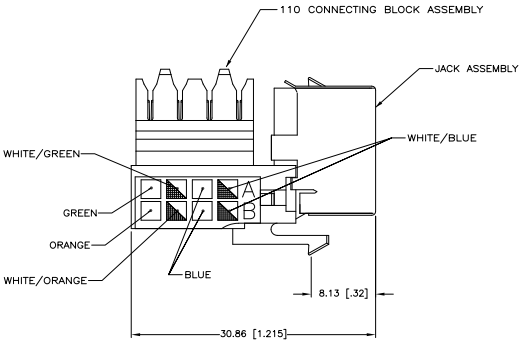

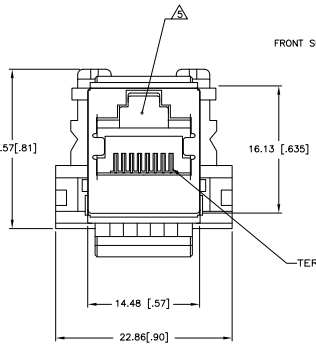

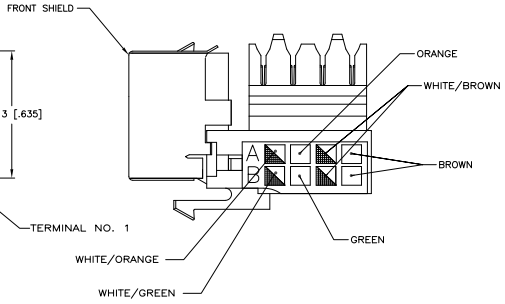

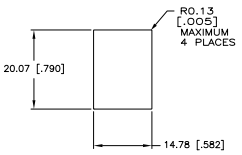

SUGGESTED SINGLE PANEL CUTOUT
SCALE 2:1

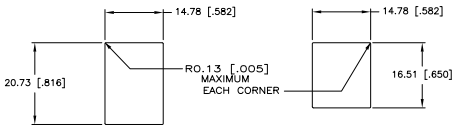

SUGGESTED BACK PANEL CUTOUT
SCALE 2:1
6

SUGGESTED FRONT PANEL CUTOUT
SCALE 2:1
6

THIS DRAWING IS A CONTROLLED DOCUMENT.	TITLE C. WHITT 18DEC08	TE Connectivity	1116515–1 PART NUMBER
DIMENSIONS: mm[INCHES]	DRAWN K. ALLEN 18DEC08	NAME 110 MODULAR JACK ASSEMBLY RJ45, ENHANCED, CAT5, SHIELDED, UNIVERSAL	
TOLERANCE UNLESS OTHERWISE SPECIFIED: 0 PLC ± – 1 PLC ± – 2 PLC ± 0.25 [.01] 3 PLC ± 0.13 [.005] 4 PLC ± – ANGLES ± –	APVD K. ALLEN 18DEC08	PRODUCT SPEC –	
		APPLICATION SPEC –	SIZE A1 CAGE CODE 00779 DRAWING NO C-1116515 RESTRICTED TO –
MATERIAL – 1	FINISH – 1	WEIGHT –	CUSTOMER DRAWING SCALE 4:1 SHEET 1 OF 2 REV C1

4803 (3/11)

Downloaded from Elcodis.com electronic components distributor

THIS DRAWING IS UNPUBLISHED. RELEASED FOR PUBLICATION -.-- -
© COPYRIGHT - - By - ALL RIGHTS RESERVED.

CAGE	DWF
HM	00

REVISIONS

P	LTR	DESCRIPTION	DATE	DWN	APVD
	-	- SEE SHEET 1-	-	-	-

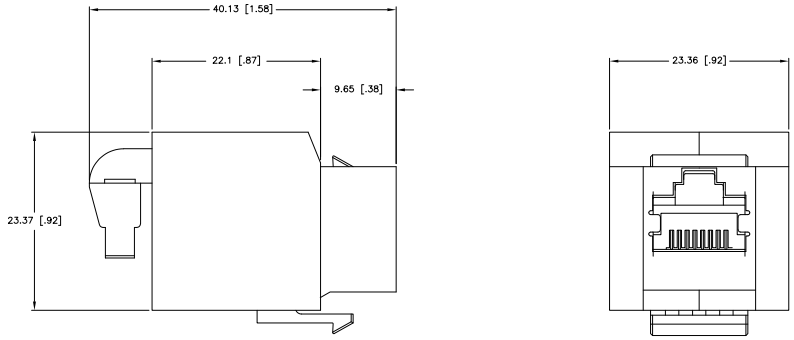

VIEW SHOWING SHIELDS ASSEMBLED

THIS DRAWING IS A CONTROLLED DOCUMENT.

DIMENSIONS: mm[INCHES]

TOLERANCES UNLESS OTHERWISE SPECIFIED:
± PLC ± -
± PLC ± -
± PLC ± 0.38 [.03]
± PLC ± 0.13 [.005]
ANGLES ± -
FINISH -

MATERIAL -

DWN: C. WHITT 18DEC08
CHK: K. ALLEN 18DEC08
APVD: K. ALLEN 18DEC08
PRODUCT SPEC: -
APPLICATION SPEC: -
WEIGHT -

TE Connectivity

NAME: 110 MODULAR JACK ASSEMBLY
RJ45, ENHANCED, CAT5, SHIELDED, UNIVERSAL

SIZE A1 | CAGE CODE 00779 | DRAWING NO C-1116515 | RESTRICTED TO -

CUSTOMER DRAWING | SCALE 4:1 | SHEET 2 OF 2 | REV C1

4805 (3/11)

Downloaded from Elcodis.com electronic components distributor