THIS DRAWING IS UNPUBLISHED. RELEASED FOR PUBLICATION - - -
© COPYRIGHT - - BY TYCO ELECTRONICS CORPORATION. ALL RIGHTS RESERVED.

UOC	DIST	REVISIONS					
AA	00	P	LTR	DESCRIPTION	DATE	DWN	APVD
			C	REV PER ECR-10-018501	6SEP2010	DZ	MQ.W

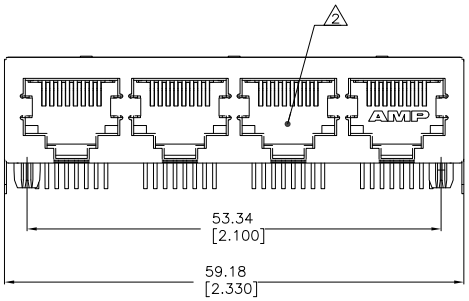

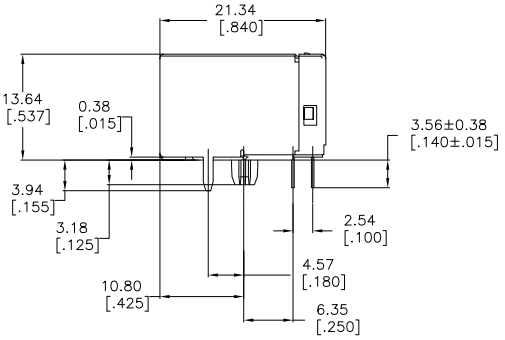

1. MATERIAL: HOUSING – NYLON, COLOR: BLACK, UL 94V-0. OVERMOLDED TERMINAL ARRAY – PBT, BROWN. TERMINALS – 0.33[.013] THICK PHOS BRONZE PLATED WITH 1.27µm[.000050] MINIMUM HARD GOLD IN LOCALIZED AREA AND 3.81µm[.000150] MINIMUM TIN-LEAD IN SOLDER AREA OVER 1.27µm [.000050] MINIMUM NICKEL UNDERPLATE. SHIELD – 0.254[.010] THICK COPPER ALLOY PLATED WITH 1.27µm[.000050] MINIMUM NICKEL AND 2.03µm[.000080] MINIMUM TIN HOT DIP ON PCB GROUND TABS

2. JACK CAVITY CONFORMS TO FCC RULES AND REGULATIONS, PART 68 SUBPART F.

3. USE #30 DRILL BIT OR 3.25mm DRILL BIT WHEN PRODUCING THESE PCB HOLES.

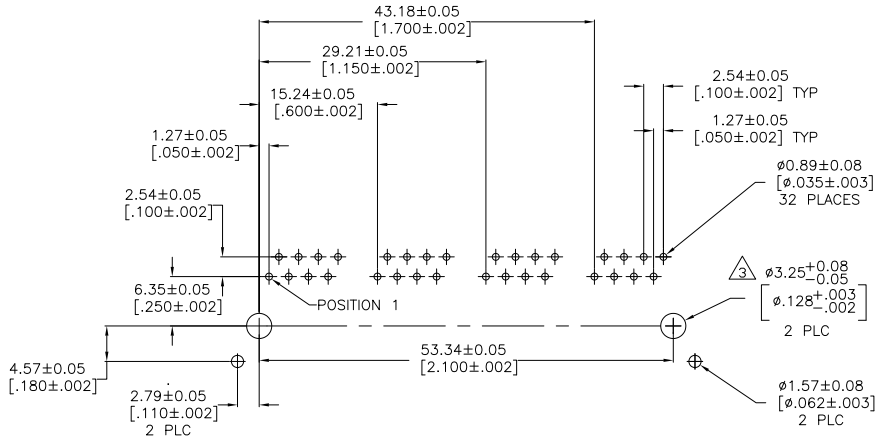

RECOMMENDED PC BOARD LAYOUT

COMPONENT SIDE

SEE APPLICATION SPECIFICATION

6116527-1
PART NUMBER

THIS DRAWING IS A CONTROLLED DOCUMENT.

DIMENSIONS: mm [INCHES]

TOLERANCE UNLESS OTHERWISE SPECIFIED: 0 PLC ± – ; 1 PLC ± – ; 2 PLC ± 0.25[.01] ; 3 PLC ± 0.13[.005] ; 4 PLC ± – ; ANGLES ± –

MATERIAL: SEE NOTE 1

FINISH: SEE NOTE 1

DWN: 13JAN2005 L. VARELA – DOCKS
CHK: 13JAN2005 J. WESTMAN
APVD: 13JAN2005 S. FLICKINGER

PRODUCT SPEC: 108-1163-2
APPLICATION SPEC: 114-2048
WEIGHT: –

Tyco Electronics Corporation
Harrisburg, PA 17105-3608

NAME: MODULAR JACK ASSEMBLY, 8 POSITION, 4 PORT, RIGHT ANGLE, LOW PROFILE, SHIELDED, PC BOARD GROUND, CATEGORY 5

SIZE: A1 | CAGE CODE: 00779 | DRAWING NO: C-6116527 | RESTRICTED TO: –

CUSTOMER DRAWING | SCALE: 4:1 | SHEET 1 OF 1 | REV C

AMP 4805 REV 31MAR2000

Downloaded from Elcodis.com electronic components distributor