THIS DRAWING IS UNPUBLISHED. RELEASED FOR PUBLICATION -.-.-
© COPYRIGHT -- BY TYCO ELECTRONICS CORPORATION. ALL RIGHTS RESERVED.

LOC	DIST
AA	00

REVISIONS

P	LTR	DESCRIPTION	DATE	DRN	APVD
	B	ECO-06-009238	22APR2006	LAM	JW
	B1	REVISED PER ECO-09-024927	09NOV09	KK	AEG

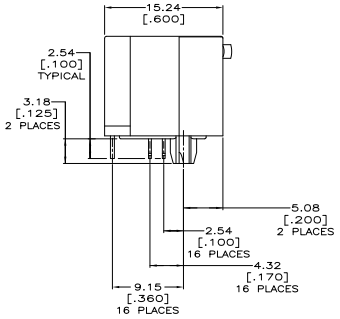

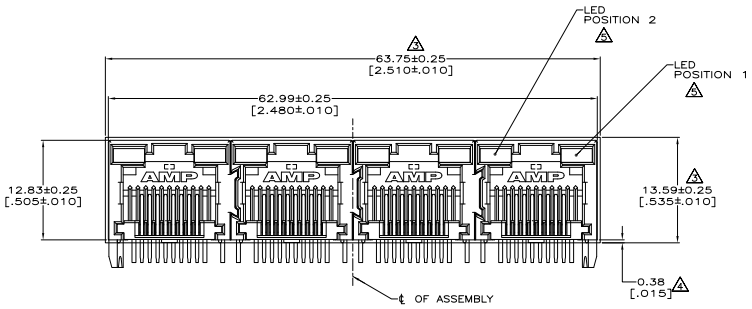

1. MATERIAL:
   HOUSING – HIGH TEMPERATURE THERMOPLASTIC, BLACK, UL94V-0.
   TERMINALS – .36[.014] THICK PHOS BRONZE PLATED WITH 3.81μm[.000150] MINIMUM THICK MATTE TIN IN SOLDER AREA. 1.27μm [.000050] MINIMUM GOLD IN LOCALIZED PLATE AREA. ENTIRE TERMINAL PLATED WITH 1.27μm [.000050] MINIMUM THICK NICKEL.
   LIGHT EMITTING DIODE (LED) – DIFFUSED EPOXY LENS, 0.51 x 0.51[.020 x .020] CARBON STEEL WIREFRAME LEADS PREPLATED WITH 8.89 μm[.0003500] THICK Sn/Cu OVER 2.03 μm[.000080] THICK Ag OVER 1.02μm[.000040] THICK Cu OVER 3.56 μm[.000140] THICK Ni OVER 1.02μm[.000040] Cu UNDERPLATE

2. JACK CAVITY CONFORMS TO FCC RULES AND REGULATIIONS PART 68, SUBPART F.

3. SUGGESTED PANEL OPENING DIMENSIONS.

4. SUGGESTED CLEARANCE BETWEEN BOTTOM OF CONNECTOR AND BOTTOM PANEL OPENING.

5. SEE TABLE FOR COLOR OF LEDS AND NUMBER REQUIRED.

6. THIS MODULAR JACK WITH INTEGRATED LED IS NOT IR REFLOW SOLDERING PROCESS COMPATIBLE.

7. OBSOLETE PARTS: OBSOLETE CIS STREAMLINING PER D.RENAUD/D.SINISI

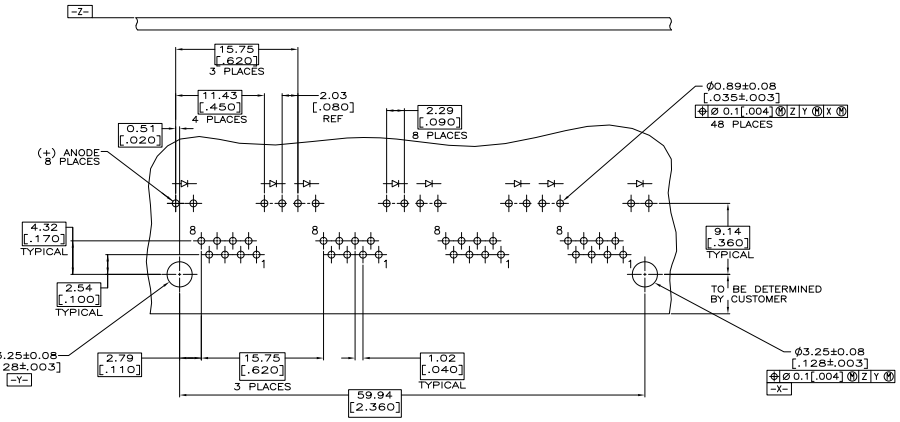

SUGGESTED PRINTED CIRCUIT BOARD LAYOUT
(COMPONENT SIDE)

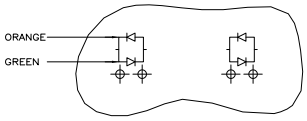

7 OBSOLETE ~~5406536-7~~ ONLY

LED CURRENT DIAGRAM

OBSOLETE 7	GREEN	GREEN	5406536-8
	ORANGE/GREEN	ORANGE/GREEN	~~5406536-7~~
	YELLOW	YELLOW	~~5406536-6~~
	GREEN	YELLOW	~~5406536-4~~
	YELLOW	–	~~5406536-3~~
	–	GREEN	~~5406536-2~~
	YELLOW	GREEN	5406536-1
	POSITION 2	POSITION 1	PART NUMBER
	INDICATOR COLOR FOR EACH HOUSING		

THIS DRAWING IS A CONTROLLED DOCUMENT.
DRN ALCORTA – 15AUG06
CHK WESTMAN 15AUG06
APVD S. FLICKINGER 15AUG06
DIMENSIONS: mm[inches]
TOLERANCE UNLESS OTHERWISE SPECIFIED: 0 PLC ± – ; 1 PLC ± ; 2 PLC ± 0.25[.01] ; 3 PLC ± 0.13[.005] ; 4 PLC ± ; ANGLES ± –
MATERIAL SEE NOTE 1
FINISH SEE NOTE 1
PRODUCT SPEC 108-1163-4
APPLICATION SPEC 114-2154
WEIGHT –
CUSTOMER DRAWING

Tyco Electronics Corporation
Harrisburg, PA 17105-3608

NAME INVERTED MODULAR JACK ASSEMBLY, 1X4, LED
–

SIZE A1 CAGE CODE 00779 DRAWING NO C-5406536 RESTRICTED TO –
SCALE 4:1 SHEET 1 OF 1 REV B1

AMP 4805 REV 31MAR2000

Downloaded from Elcodis.com electronic components distributor