THIS DRAWING IS UNPUBLISHED. RELEASED FOR PUBLICATION -.-.-
© COPYRIGHT - BY TYCO ELECTRONICS CORPORATION. ALL RIGHTS RESERVED.

UOC	DIST	REVISIONS					
AA	00	P	LTR	DESCRIPTION	DATE	DRN	APVD
			K	ECO-07-022131	03NOV07	LAM	JW

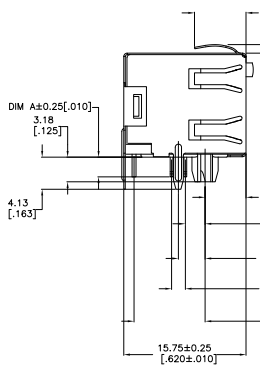

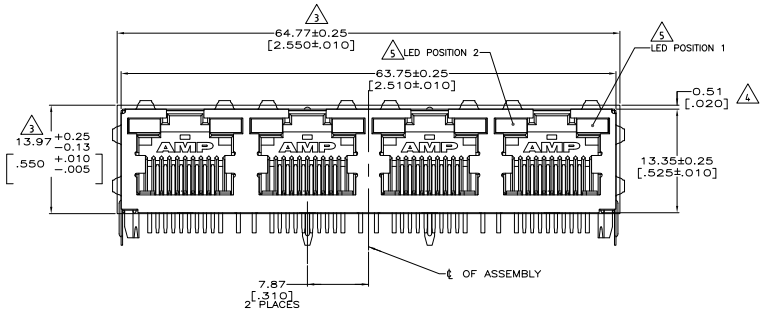

1. MATERIAL:
   HOUSING – HIGH TEMPERATURE THERMOPLASTIC, BLACK, UL94V–0.
   TERMINALS – 0.36[.014] THICK PHOS BRONZE PLATED WITH 3.81μm[.000150] MINIMUM THICK BRIGHT TIN LEAD IN SOLDER AREA. 1.27μm [.000050] MINIMUM GOLD IN LOCALIZED PLATE AREA. ENTIRE TERMINAL PLATED WITH 1.27μm [.000050] MINIMUM THICK NICKEL.
   SHIELD – 0.196[.0077] THICK COPPER ZINC ALLOY PREPLATED WITH 1.27μm[.000050] MINIMUM SATIN NICKEL WITH 2.03μm[.000080] MINIMUM TIN POST DIPPED ON PCB GROUND TABS.
   LIGHT EMITTING DIODE (LED) – DIFFUSED EPOXY LENS, 0.51 x 0.51[.020 x .020] CARBON STEEL WIREFRAME LEADS PLATED WITH 8.89μm[.000350] TIN/COPPER OVER 2.03μm[.000080] SILVER OVER 1.02μm[.000040] NICKEL UNDERPLATE OVER 2.03μm[.000080] COPPER UNDERPLATE.
2. JACK CAVITY CONFORMS TO FCC RULES AND REGULATIIONS PART 68, SUBPART F.
3. SUGGESTED PANEL OPENING DIMENSIONS.
4. SUGGESTED CLEARANCE BETWEEN TOP OF CONNECTOR AND TOP PANEL OPENING.
5. SEE TABLE FOR COLOR OF LEDS AND NUMBER REQUIRED.
6. THIS MODULAR JACK WITH INTEGRATED LED IS NOT IR REFLOW SOLDERING PROCESS COMPATIBLE.

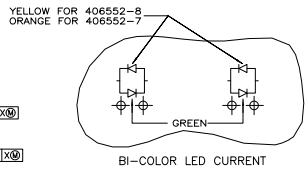

BI–COLOR LED CURRENT DIAGRAM

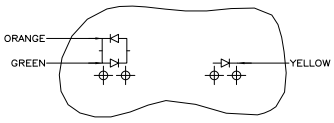

LED CURRENT DIAGRAM
406552–9 ONLY

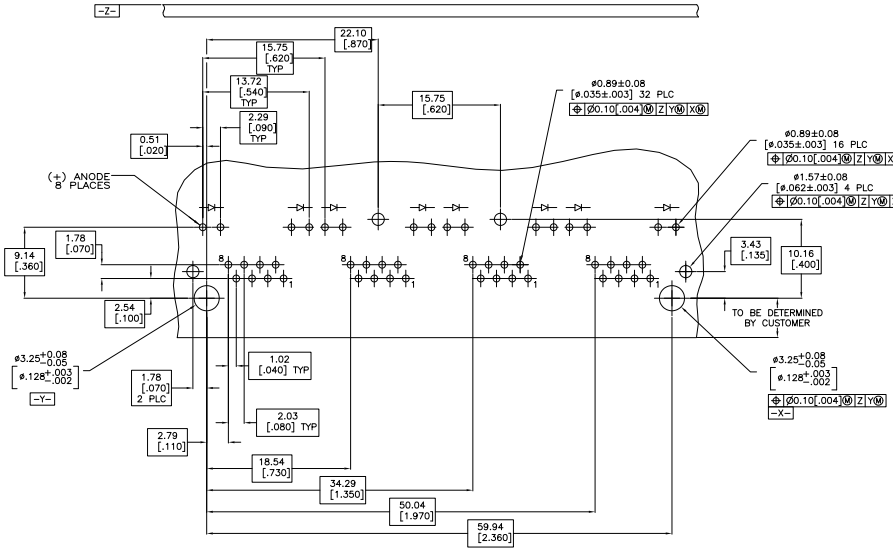

RECOMMENDED PRINTED CIRCUIT BOARD LAYOUT
(COMPONENT SIDE)

	DIM A SOLDERTAIL LENGTH	POSITION 2 INDICATOR COLOR FOR EACH HOUSING	POSITION 1 INDICATOR COLOR FOR EACH HOUSING	PART NUMBER
	.100	RED	GREEN	1–406552–4
OBSOLETE	~~.100~~	~~GREEN/RED~~	~~GREEN/RED~~	~~1–406552–3~~
	.120	YELLOW	GREEN	1–406552–1
	.100	GREEN/ORANGE	YELLOW	406552–9
	.100	GREEN/YELLOW	GREEN/YELLOW	406552–8
	.100	GREEN/ORANGE	GREEN/ORANGE	406552–7
	.100	YELLOW	YELLOW	406552–6
	.100	GREEN	GREEN	406552–5
	.100	GREEN	YELLOW	406552–4
	.100	YELLOW	–	406552–3
	.100	–	GREEN	406552–2
	.100	YELLOW	GREEN	406552–1

THIS DRAWING IS A CONTROLLED DOCUMENT.

DIMENSIONS: mm [INCHES]

TOLERANCE UNLESS OTHERWISE SPECIFIED:
0 PLC ± –
1 PLC ± –
2 PLC ± 0.25[.01]
3 PLC ± 0.13[.005]
4 PLC ± –
ANGLES ± –

MATERIAL: SEE NOTE 1
FINISH: SEE NOTE 1

DWN T. SPRINKLE 23SEP97
CHK T. SPRINKLE 23SEP97
APVD M. DERSTINE 23SEP97
PRODUCT SPEC 108–1163–4
APPLICATION SPEC 114–2154
WEIGHT –

Tyco Electronics Corporation
Harrisburg, PA 17105–3608

NAME: INVERTED MODULAR JACK ASSEMBLY, 1X4, SHIELDED, PANEL GROUND, WITH LED

SIZE A1 | CAGE CODE 00779 | DRAWING NO C–406552 | RESTRICTED TO –

CUSTOMER DRAWING | SCALE 4:1 | SHEET 1 OF 1 | REV K

AMP 4805 REV 31MR2000

Downloaded from Elcodis.com electronic components distributor