THIS DRAWING IS UNPUBLISHED. RELEASED FOR PUBLICATION -.- .
© COPYRIGHT - BY TYCO ELECTRONICS CORPORATION. ALL RIGHTS RESERVED.

LOC	DIST
AA	22

REVISIONS

P	LTR	DESCRIPTION	DATE	DWN	APVD
	A	REV PER OS11-0201-04	09NOV05	RG	JW

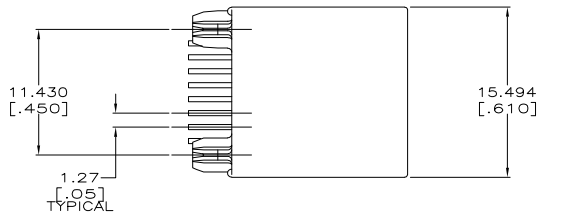

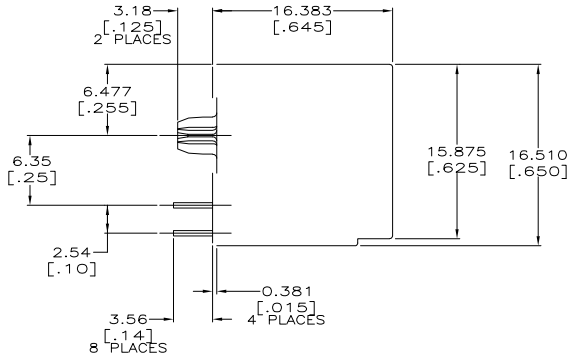

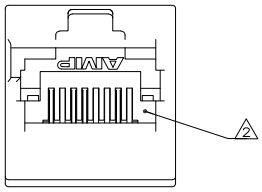

1. MATERIAL: HOUSING – POLYESTER MOLDING COMPOUND, BLACK, UL 94V–O.
TERMINALS – 0.33[.013] THICK PHOS BRONZE PLATED WITH 1.27μm[.000050] MINIMUM THICK HARD GOLD IN LOCALIZED AREA AND 3.81μm [.000150] MINIMUM THICK MATTE TIN IN SOLDER AREA OVER 1.27μm[.000050] MINIMUM THICK NICKEL UNDERPLATE.
TERMINAL INSERT PLASTIC: POLYESTER MOLDING COMPOUND, GRAY, UL 94V–O.

2. JACK CAVITY CONFORMS TO FCC RULES AND REGULATIONS, PART 68 SUBPART F.

3. ALL DIMENSIONS SHOWN ARE NOMINAL UNLESS OTHERWISE SPECIFIED.

4. CAUTION: CATEGORY 5 JACK SOLDER TAIL POSITIONS DO NOT FOLLOW SAME NUMBER SEQUENCE AS THAT OF TRADITIONAL JACKS.

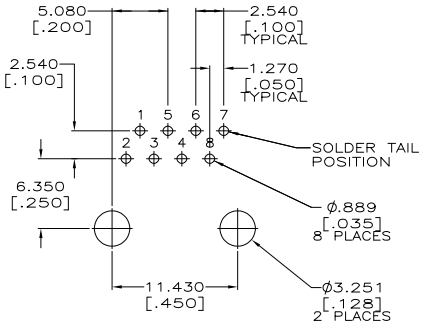

SUGGESTED PC BOARD LAYOUT
COMPONENT SIDE

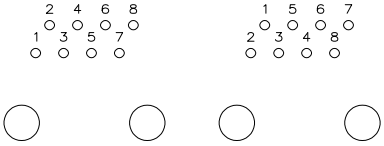

TRADITIONAL JACK 4 CATEGORY 5 JACK

5558398–1
PART NO.

THIS DRAWING IS A CONTROLLED DOCUMENT.	DIMENSIONS: mm	TOLERANCES UNLESS OTHERWISE SPECIFIED: 0 PLC ± – ; 1 PLC ± – ; 2 PLC ± 0.25[.01] ; 3 PLC ± 0.127[.005] ; 4 PLC ± – ; ANGLES ± –	
MATERIAL 1	FINISH 1		

DWN R.GRZYBOWSKI 09NOV05
CHK J.WESTMAN 09NOV05
APVD S.FLICKINGER 09NOV05
PRODUCT SPEC 108–1163
APPLICATION SPEC 114–2048
WEIGHT –
CUSTOMER DRAWING

Tyco Electronics Corporation
Harrisburg, PA 17105–3608

NAME: MODULAR JACK ASSEMBLY, 8 POSITION, TOP ENTRY, CATEGORY 5, KEYED

SIZE	CAGE CODE	DRAWING NO	RESTRICTED TO
A2	00779	C–5558398	–

SCALE	SHEET	REV
4:1	1 OF 1	A

AMP 1471–9 REV 31MAR2000

5558398

Downloaded from Elcodis.com electronic components distributor