THIS DRAWING IS UNPUBLISHED. RELEASED FOR PUBLICATION: -,-,-
© COPYRIGHT - - BY TYCO ELECTRONICS CORPORATION. ALL RIGHTS RESERVED.

UOC	DIST
AD	00

REVISIONS

F	LTR	DESCRIPTION	DATE	DRN	APVD
	A	REV PER EC 0511-0201-04	15JUN2005	LV	SF

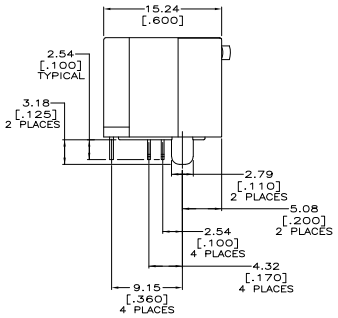

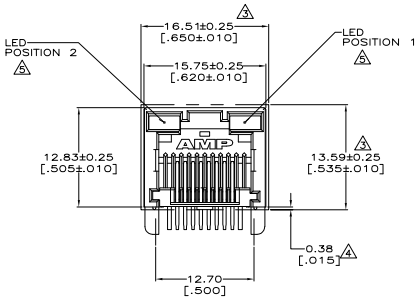

1. MATERIAL:
HOUSING – HIGH TEMPERATURE THERMOPLASTIC, BLACK, UL94V-0.
TERMINALS – .36[.014] THICK PHOS BRONZE PLATED WITH 3.81μm[.000150] MINIMUM THICK MATTE TIN IN SOLDER AREA. 1.27μm [.000050] MINIMUM GOLD IN LOCALIZED PLATE AREA. ENTIRE TERMINAL PLATED WITH 1.27μm [.000050] MINIMUM THICK NICKEL.
LIGHT EMITTING DIODE (LED) – DIFFUSED EPOXY LENS, .51 × .51[.020 × .020] CARBON STEEL WIREFRAME LEADS PREPLATED WITH 8.89μm[.0003500] THICK Sn/Cu OVER 2.03μm[.000080] THICK Ag OVER 1.02 μm[.000040] THICK Cu OVER 3.56μm[.000140] THICK Ni OVER 1.02μm[.000040] Cu UNDERPLATE.

2. JACK CAVITY CONFORMS TO FCC RULES AND REGULATIIONS PART 68, SUBPART F.

3. SUGGESTED PANEL OPENING DIMENSIONS.

4. SUGGESTED CLEARANCE BETWEEN BOTTOM OF CONNECTOR AND BOTTOM PANEL OPENING.

5. SEE TABLE FOR COLOR OF LEDS AND NUMBER REQUIRED.

6. THIS MODULAR JACK WITH INTEGRATED LED IS IR REFLOW SOLDERING PROCESS COMPATIBLE. (230˚C MAX., FOR 10 SEC MAX. DURATION).

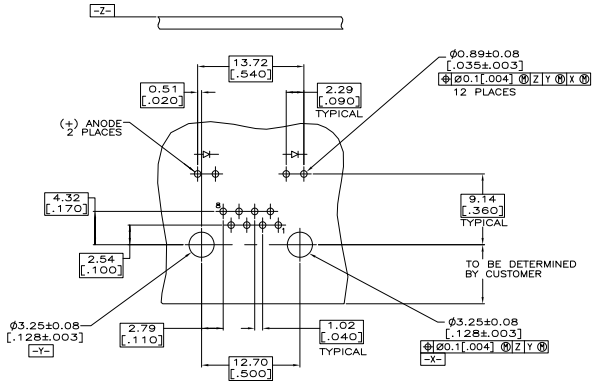

SUGGESTED PRINTED CIRCUIT BOARD LAYOUT
(COMPONENT SIDE)

GREEN	GREEN	6364139-5
POSITION 2	POSITION 1	PART NUMBER
INDICATOR COLOR		

THIS DRAWING IS A CONTROLLED DOCUMENT.

DRN: L. VARELA – DOCKS 15JUN2005
CHK: J. WESTMAN 15JUN2005
APVD: S. FLICKINGER 15JUN2005

Tyco Electronics Corporation
Harrisburg, Pa 17105-3608

DIMENSIONS: mm [INCHES]
TOLERANCE UNLESS OTHERWISE SPECIFIED:
0 PLC ± –
1 PLC ± –
2 PLC ± 0.25[.01]
3 PLC ± 0.13[.005]
4 PLC ± –
ANGLES ± –
MATERIAL △
FINISH △

NAME: INVERTED MODULAR JACK ASSEMBLY, 1X1, LED, ZERO INSERTION FORCE

PRODUCT SPEC: 108-1163-4
APPLICATION SPEC: 114-2154
WEIGHT: –

SIZE: A1 | CAGE CODE: | DRAWING NO: 00779 C-6364139 | RESTRICTED TO: –

CUSTOMER DRAWING | SCALE: 4:1 | SHEET 1 OF 1 | REV A

Downloaded from Elcodis.com electronic components distributor