THIS DRAWING IS UNPUBLISHED. RELEASED FOR PUBLICATION -.-.-
© COPYRIGHT - - BY TYCO ELECTRONICS CORPORATION. ALL RIGHTS RESERVED.

LOC	DIST
AA	00

REVISIONS

P	LTR	DESCRIPTION	DATE	DRN	APVD
	B	ECO-06-011837	20MAY2006	LAM	JW

1. MATERIAL: HOUSING – HIGH TEMPERATURE THERMOPLASTIC, SEE TABLE FOR COLOR.
   TERMINALS – 0.3[.012] THICK COPPER ALLOY PLATED WITH 1.27µm[.000050] MINIMUM GOLD IN LOCALIZED CONTACT AREA, 2.5µm[.000100] MINIMUM MATTE TIN ON TERMINATION END, OVER 1.27µm[.000050] MINIMUM NICKEL OVER THE ENTIRE TERMINAL.
   BOARDLOCK – BRASS, 1/2 HARD,2.54µm[.000100] MINIMUM MATTE TIN OVER 1.27µm[.000050] MINIMUM NICKEL.

2. JACK CAVITY CONFORMS TO FCC RULES AND REGULATIONS, PART 68 SUBPART F.

3. DATUM ESTABLISHED BY CUSTOMER.

4. PACKAGING TAPE AND REEL:(PER EIA 481 SPEC)
   TAPE – 44mm[1.73] WIDE
   POCKET PITCH – 24mm[.945]
   CORRUGATED REEL DIAMETER – 560mm[22.0]
   PIECES/REEL – 650

5. PACKAGING TAPE AND REEL:(PER EIA 481 SPEC)
   TAPE – 44mm[1.73] WIDE
   POCKET PITCH – 24mm[.945]
   PLASTIC REEL DIAMETER – 330mm[13.0]
   PIECES/REEL – 200

6. MANUFACTURING DATE CODE LOCATED APPROXIMATELY AS SHOWN. FIRST 2 DIGITS ARE YEAR, SECOND 2 DIGITS ARE WORK WEEK, AND LAST DIGIT IS DAY OF THE WEEK

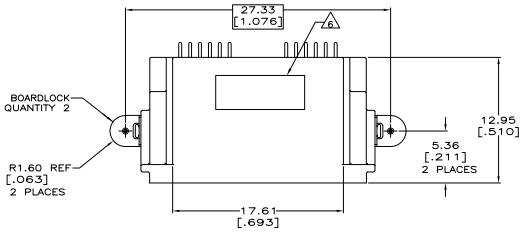

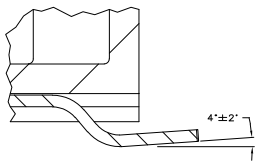

DETAIL A
SCALE 20:1

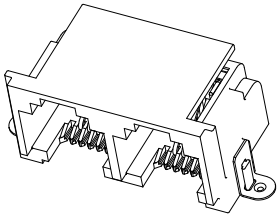

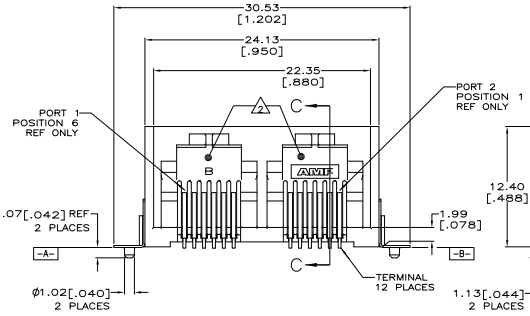

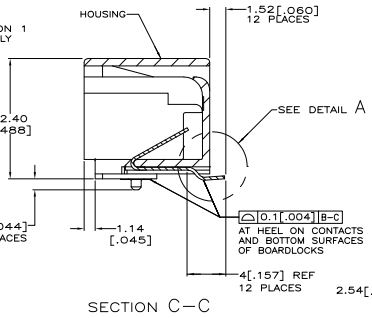

SECTION C–C

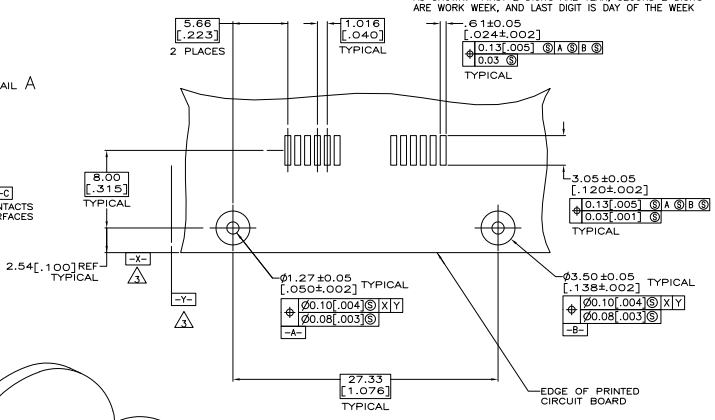

RECOMMENDED
PRINTED CIRCUIT BOARD LAYOUT
COMPONENT SIDE – VIEWED FROM TOP
SCALE 5:1

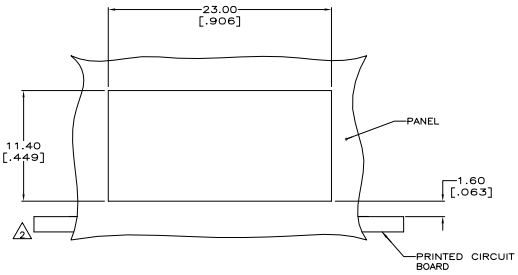

RECOMMENDED PANEL CUTOUT
SCALE 5:1

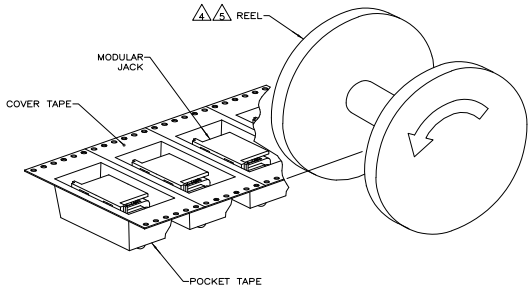

NONE	GRAY	4	5406903–4
6	GRAY	5	5406903–2
6	GRAY	4	5406903–1
MARKING	COLOR	PACKAGING	PART NUMBER

THIS DRAWING IS A CONTROLLED DOCUMENT.

DIMENSIONS: mm [INCHES]

TOLERANCE UNLESS OTHERWISE SPECIFIED:
0 PLC ± –
1 PLC ± .1
2 PLACE ± 0.13[.005]
3 PLC ± –
4 PLC ± –
ANGLES ± –

MATERIAL: SEE NOTE 1
FINISH: SEE NOTE 1

DRN: J. ALCORTA – 16JUN2005
CHK: J. WESTMAN 16JUN2005
APVD: S. FLICKINGER 16JUN2005

PRODUCT SPEC: 108–1689
APPLICATION SPEC: 114–6040
WEIGHT: 2.2 GRAMS

Tyco Electronics Corporation
Harrisburg, PA 17105–3608

NAME: MODULAR JACK ASSEMBLY, 6/6, 2 PORT,SURFACE MOUNT,RIGHT ANGLE, WITH PANEL STOPS

SIZE: A1 | CAGE CODE: 00779 | DRAWING NO: C-5406903 | RESTRICTED TO: –

CUSTOMER DRAWING | SCALE: 5:1 | SHEET 1 OF 1 | REV: B

AMP 4805 REV 31MAR2000

Downloaded from Elcodis.com electronic components distributor