THIS DRAWING IS UNPUBLISHED. RELEASED FOR PUBLICATION -.-.-
© COPYRIGHT — BY TYCO ELECTRONICS CORPORATION. ALL RIGHTS RESERVED.

LOC	DIST	REVISIONS				
AA	22	P	LTR	DESCRIPTION	DATE	DRN	APVD
			A	REV PER EC 0511-0201-04	09JUN2005	JA	SF

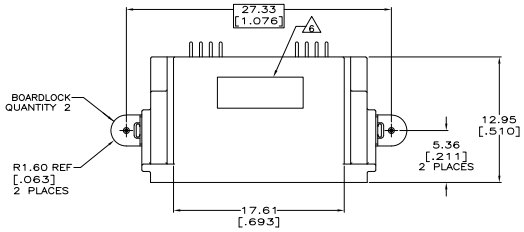

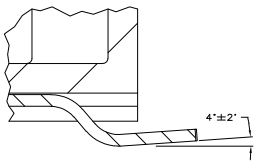

DETAIL A
SCALE 20:1

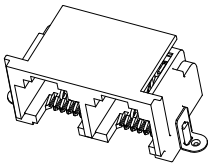

1. MATERIAL: HOUSING – HIGH TEMPERATURE THERMOPLASTIC, SEE TABLE FOR COLOR.
TERMINALS – 0.3[.012] THICK COPPER ALLOY PLATED WITH 1.27μm[.000050] MINIMUM GOLD IN LOCALIZED CONTACT AREA, 2.5μm[.000100] MINIMUM MATTE TIN ON TERMINATION END, OVER 1.27μm[.000050] MINIMUM NICKEL OVER THE ENTIRE TERMINAL.
BOARDLOCK – BRASS, 1/2 HARD,2.54μm[.000100] MINIMUM MATTE TIN OVER 1.27μm[.000050] MINIMUM NICKEL.

2. JACK CAVITY CONFORMS TO FCC RULES AND REGULATIONS, PART 68 SUBPART F.

3. DATUM ESTABLISHED BY CUSTOMER.

4. PACKAGING TAPE AND REEL:(PER EIA 481 SPEC)
TAPE – 44mm[1.73] WIDE
POCKET PITCH – 24mm[.945]
CORRUGATED REEL DIAMETER – 560mm[22.0]
PIECES/REEL – 650

5. PACKAGING TAPE AND REEL:(PER EIA 481 SPEC)
TAPE – 44mm[1.73] WIDE
POCKET PITCH – 24mm[.945]
PLASTIC REEL DIAMETER – 330mm[13.0]
PIECES/REEL – 200

6. MANUFACTURING DATE CODE LOCATED APPROXIMATELY AS SHOWN. FIRST 2 DIGITS ARE YEAR, SECOND 2 DIGITS ARE WORK WEEK, AND LAST DIGIT IS DAY OF THE WEEK

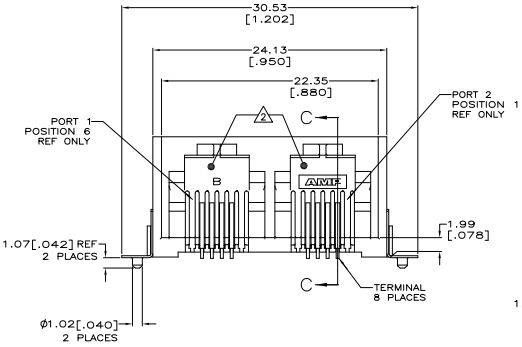

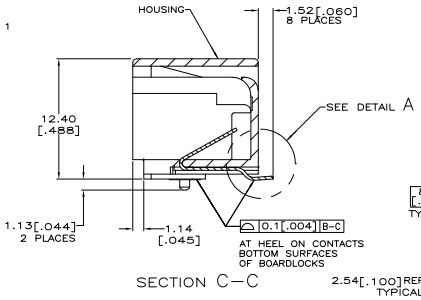

SECTION C–C

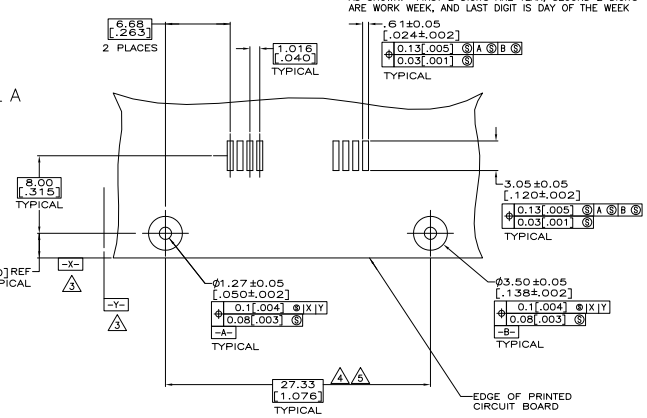

RECOMMENDED
PRINTED CIRCUIT BOARD LAYOUT
COMPONENT SIDE – VIEWED FROM TOP
SCALE 5:1

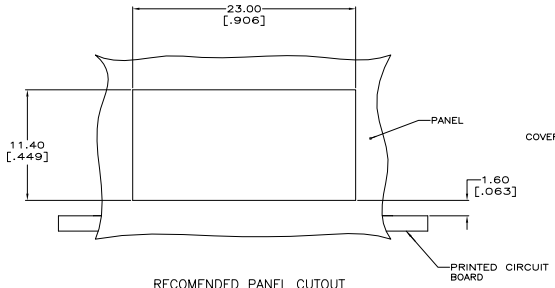

RECOMENDED PANEL CUTOUT
3 SCALE 5:1

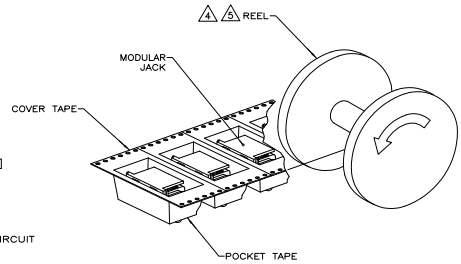

LEMON YELLOW	5	5406393–5
BLACK	5	5406393–3
GRAY	4	5406393–1
COLOR	PACKAGING	PART NUMBER

THIS DRAWING IS A CONTROLLED DOCUMENT.

DRAWN BY: J. ALCORTA – DOCKS
CHK: J. WESTMAN
APVD: S. FLICKINGER

DIMENSIONS: mm [INCHES]
TOLERANCE UNLESS OTHERWISE SPECIFIED: 0 PLC ± – ; 1 PLC ± – ; 2 PLC ± 0.1[.005] ; 3 PLC ± – ; 4 PLC ± – ; ANGLES ± –

MATERIAL 1
FINISH 1

Tyco Electronics Corporation
Harrisburg, PA 17105–3608

NAME: MODULAR JACK ASSEMBLY, 6/4,2 PORT,SURFACE MOUNT,RIGHT ANGLE,WITH PANEL STOPS

PRODUCT SPEC: 108–1689
APPLICATION SPEC: 114–6040
WEIGHT: 2.2 GRAMS

SIZE: A1 | CAGE CODE: 00779 | DRAWING NO: C–5406393 | RESTRICTED TO: –
CUSTOMER DRAWING | SCALE: 5:1 | SHEET 1 OF 1 | REV: A

AMP 4805 REV 31MAR2000

Downloaded from Elcodis.com electronic components distributor