THIS DRAWING IS UNPUBLISHED. RELEASED FOR PUBLICATION 20
© COPYRIGHT 20 BY TYCO ELECTRONICS CORPORATION. ALL RIGHTS RESERVED.

LOC	DIST
AA	22

REVISIONS

P	LTR	DESCRIPTION	DATE	DWN	APVD
	C2	REV PER ECR-09-010346	30MAR2009	JY	SY

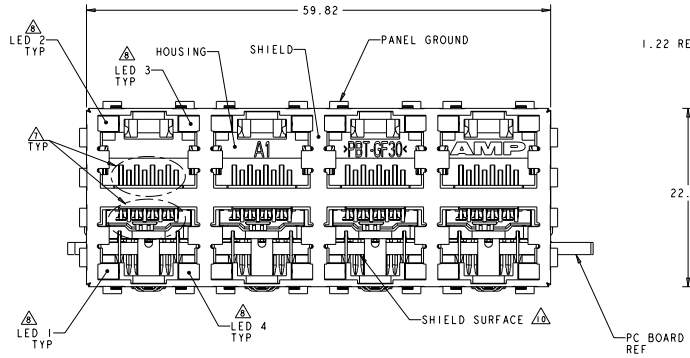

P/N 6368062-2 SHOWN

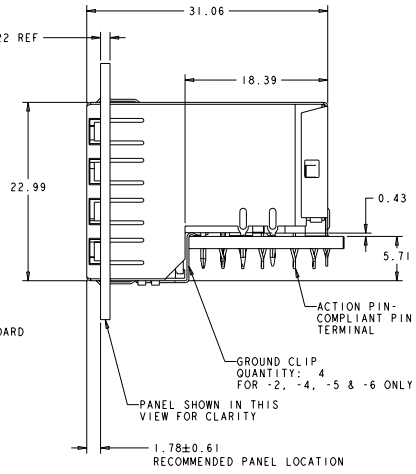

1. MATERIAL:
   HOUSING
   PBT POLYESTER, BLACK, UL 94V-0.
   TERMINALS
   0.33 THICK PHOSPHOR BRONZE PLATED WITH 1.27µm MINIMUM THICK HARD GOLD IN LOCALIZED AREA AND 3.81µm MINIMUM THICK MATTE TIN IN ACTION PIN COMPLIANT PIN TERMINAL AREA OVER 1.27µm MINIMUM THICK NICKEL UNDERPLATE.
   SHIELD
   0.25 THICK COPPER ALLOY PLATED WITH 2.03µm MINIMUM BRIGHT TIN OVER 1.27 µm MINIMUM NICKEL
   LIGHT EMITTING DIODE (LED)
   DIFFUSED EPOXY LENS, 12.95 CARBON STEEL WIREFRAME LEADS PREPLATED WITH 8.89 µm THICK Sn/Cu OVER 2.03 µm THICK Ag OVER 1.02 µm THICK Cu OVER 3.56 µm THICK Ni OVER 1.02 µm THICK Cu UNDERPLATE
   LED ACTION PIN - COMPLIANT PIN CONTACTS
   0.3 THICK BRASS PLATED WITH 2-4µm BRIGHT TIN.
2. JACK CAVITY CONFORMS TO FCC RULES AND REGULATIONS, PART 68 SUBPART F.
3. ALL DIMENSIONS ARE NOMINAL UNLESS OTHERWISE SPECIFIED.
4. DRILLED HOLE DIA = 1.02±.025.
   COPPER THICKNESS = 0.025-0.075.
   TIN LEAD THICKNESS = 0.008 MIN.
5. DATUMS AND BASIC DIMENSIONS ESTABLISHED BY CUSTOMER.
6. DATE CODE LOCATED ON REAR OF PART APPROXIMATELY AS SHOWN.
7. CONTACTS ARE NOT INTENDED TO BE ALIGNED WITH EACH OTHER.
8. SUGGESTED OPERATING CURRENT FOR LEDS IS 20 mA.
9. TWO LEDS PER PORT, SIZE .079 X .118, SEE TABLE FOR COLOR
10. CLEAR 0.038 MIN THICK SURFACE PROTECTION TAPE APPLIED TO SHIELD SURFACE. FILM DOES NOT HAVE CUTOUTS IN EACH PORT. REMOVE TAPE PRIOR TO MATING A MODULAR PLUG TO THE JACK
11. MATERIAL:
    SHIELD
    0.25 THICK COPPER ALLOY PLATED WITH 1.27 µm MINIMUM SATIN NICKEL.
12. THE PART NUMBER 6368062-7 IS PRELIMINARY.

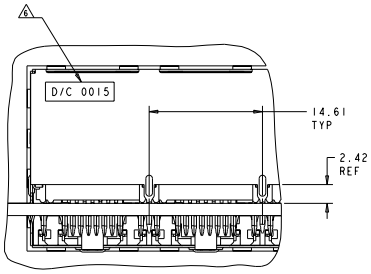

PARTIAL BACK VIEW

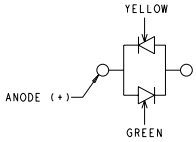

LED CURRENT DIAGRAM
6368062-4,-7

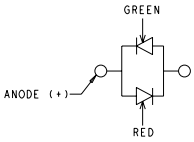

LED CIRCUIT DIAGRAM
6368062-6

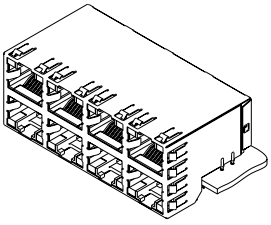

PN 6368062-1,-2,-3,-4,-5,-6,
AND 1-6368062-6
SCALE 2:1

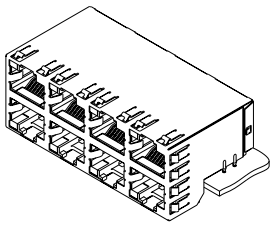

PN 6368062-7
SCALE 2:1

11	YELLOW	YELLOW	GREEN	GREEN	WITHOUT GROUND CLIP	1-6368062-6
-	N/A	N/A	GREEN/YELLOW	GREEN/YELLOW	WITHOUT GROUND CLIP	6368062-7 12
-	RED/GREEN	RED/GREEN	RED/GREEN	RED/GREEN	WITH GROUND CLIP	6368062-6
10	GREEN	GREEN	GREEN	GREEN	WITH GROUND CLIP	6368062-5
-	GREEN/YELLOW	GREEN/YELLOW	GREEN/YELLOW	GREEN/YELLOW	WITH GROUND CLIP	6368062-4
-	YELLOW	YELLOW	GREEN	GREEN	WITHOUT GROUND CLIP	6368062-3
-	GREEN	GREEN	GREEN	GREEN	WITH GROUND CLIP	6368062-2
-	GREEN	GREEN	GREEN	GREEN	WITHOUT GROUND CLIP	6368062-1
REMARKS	LED #4 (LOWER-RIGHT)	LED #3 (UPPER-RIGHT)	LED #2 (UPPER-LEFT)	LED #1 (LOWER-LEFT)	DESCRIPTION	PART NUMBER

THIS DRAWING IS SUBMITTED FOR THE PURPOSE OF ESTABLISHING A SPECIFICATION FOR PRODUCTS TO BE PURCHASED AND SHALL NOT BE LOANED OR SUPPLIED FOR ANY OTHER PURPOSE

DIMENSIONS: mm

TOLERANCES UNLESS OTHERWISE SPECIFIED:
0 PLC ±-
1 PLC ±0.13
2 PLC ±0.13
3 PLC ±-
4 PLC ±-
ANGLES ±0

MATERIAL :
FINISH :

DWN A. MAYER 13APR2005
CHK J. WESTMAN 13APR2005
APVD S. FLICKINGER 13APR2005

PRODUCT SPEC 108-1854
APPLICATION SPEC 114-2160
WEIGHT -

Tyco Electronics Corporation
Harrisburg, PA 17105-3608

NAME STACKED MODULAR JACK ASSEMBLY, 2x4 OFFSET, WITH LEDS, 8 POSN, RJ45 SHIELDED, PANEL GROUNDS, CAT 5

SIZE A1 | CAGE CODE 00779 | DRAWING NO C-6368062 | RESTRICTED TO -

CUSTOMER DRAWING | SCALE 4:1 | SHEET 1 OF 2 | REV C2

AMP 4805 REV 31MAR2000
Pro/ENGINEER DRAWING

Downloaded from Elcodis.com electronic components distributor

THIS DRAWING IS UNPUBLISHED. RELEASED FOR PUBLICATION 20
© COPYRIGHT 20 BY TYCO ELECTRONICS CORPORATION. ALL RIGHTS RESERVED.

LOC	DIST
AA	22

REVISIONS

P	LTR	DESCRIPTION	DATE	DWN	APVD
	-	SEE SHEET 1	-	-	-

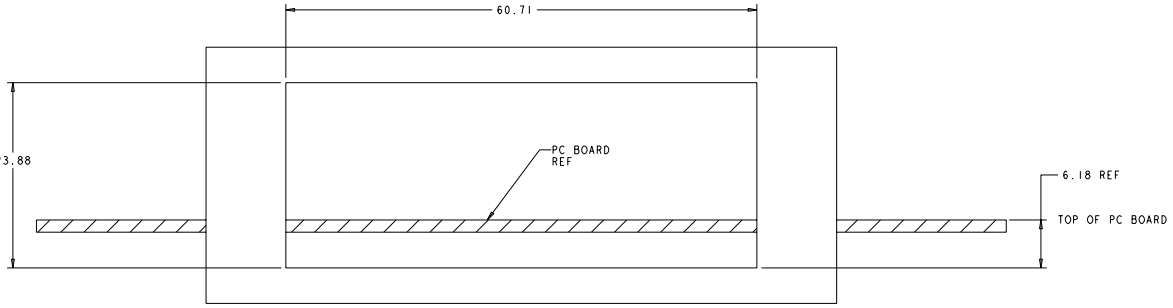

RECOMMENDED PANEL CUT-OUT

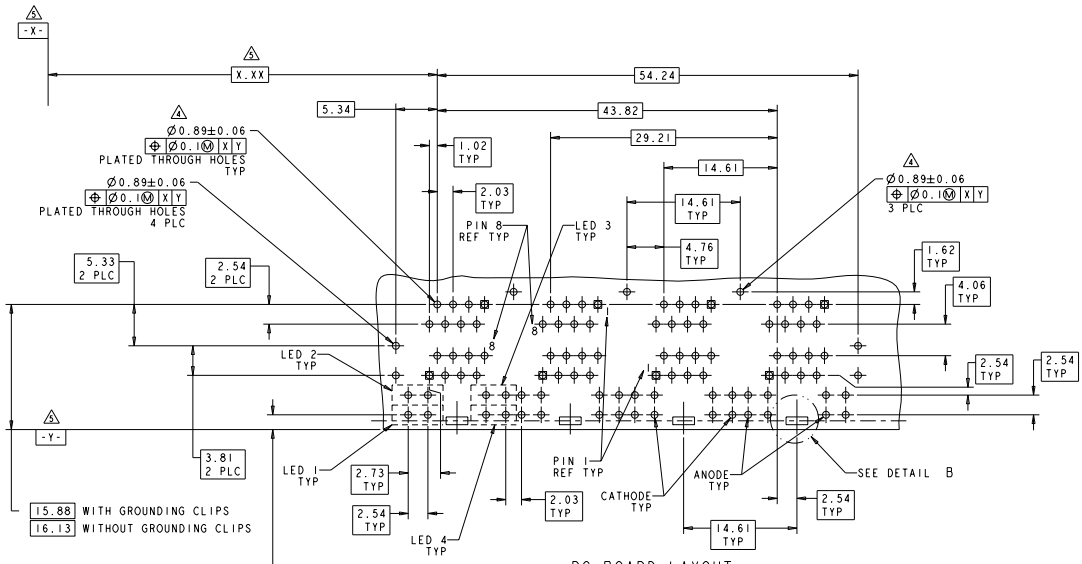

PC BOARD LAYOUT
(COMPONENT SIDE)
LED #3,#4 NOT REQUIRED FOR 6368062-7

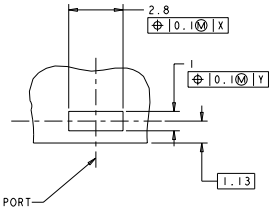

DETAIL B
PLATED PADS REQUIRED FOR 6368062-2, -4, -5 & -6
(PRODUCT WITH GROUNDING CLIPS)
SCALE 10:1
4 PLACES

DRN	L.A.MAYER	1SAPR2005
CHK	J.WESTMAN	1SAPR2005
APPD	S.FLICKINGER	1SAPR2005
PRODUCT SPEC	108-1854	
APPLICATION SPEC	114-2160	
WEIGHT	-	
CUSTOMER DRAWING		

DIMENSIONS: MM
TOLERANCES UNLESS OTHERWISE SPECIFIED:
0 PLC ±-
1 PLC ±0.13
2 PLC ±0.13
3 PLC ±-
4 PLC ±-
ANGLES ±0
FINISH -
MATERIAL -

Tyco Electronics Corporation
Harrisburg, PA 17105-3608

NAME: STACKED MODULAR JACK ASSEMBLY, 2x4 OFFSET, WITH LEDS, 8 POSN, RJ45 SHIELDED, PANEL GROUNDS, CAT 5

SIZE A1 | CAGE CODE 00779 | DRAWING NO C-6368062 | RESTRICTED TO -

SCALE 4:1 | SHEET 2 OF 2 | REV C2

AMP 4805 REV 31MAR2000

Downloaded from Elcodis.com electronic components distributor