THIS DRAWING IS UNPUBLISHED. RELEASED FOR PUBLICATION -.- .
© COPYRIGHT - BY TYCO ELECTRONICS CORPORATION. ALL RIGHTS RESERVED.

LOC	DIST
AA	00

REVISIONS

P	LTR	DESCRIPTION	DATE	DWN	APVD
	B	ECO-07-017784	15AUG2007	LAM	PR

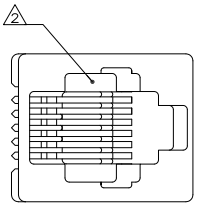

1. MATERIAL: HOUSING - HTN MOLDING COMPOUND, UL 94V-0, COLOR: BLACK
   TERMINAL - 0.36[.014] THICK PHOS BRONZE PLATED WITH 1.27µm [.000050] MINIMUM THICK HARD GOLD IN LOCALIZED GOLD PLATE AREA AND 3.81µm[.000150] MINIMUM THICK MATTE TIN IN SOLDER AREA OVER 1.27µm[.000050] MINIMUM THICK NICKEL UNDERPLATE.

2. CAVITY CONFORMS TO FCC RULES AND REGULATIONS PART 68, SUBPART F.

3. BULK PACKAGED IN A TRAY.

4. TERMINALS LOADED IN MIDDLE TWO (2) POSITIONS.

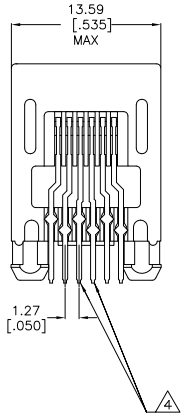

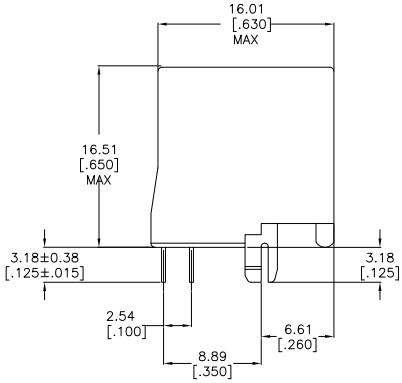

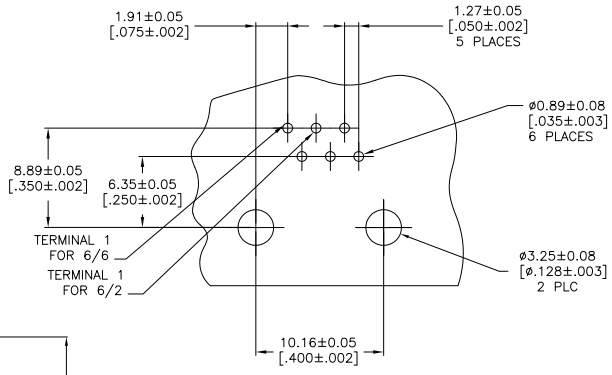

SUGGESTED PC BOARD LAYOUT
COMPONENT SIDE

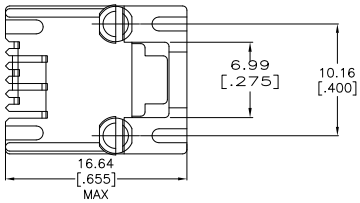

2 4	3	5569984-2
6	3	5569984-1
TERMINALS	PACKAGED	PART NUMBER

THIS DRAWING IS A CONTROLLED DOCUMENT.

DIMENSIONS: mm [INCHES]

TOLERANCES UNLESS OTHERWISE SPECIFIED:
0 PLC ± -
1 PLC ± -
2 PLC ± 0.13[.005]
3 PLC ± -
4 PLC ± -
ANGLES ± -

MATERIAL: SEE NOTE 1
FINISH: SEE NOTE 1

DWN L. VARELA - DOCK5 08JUN2005
CHK J. WESTMAN 08JUN2005
APVD S. FLICKINGER 08JUN2005
PRODUCT SPEC 108-1163
APPLICATION SPEC 114-2048
WEIGHT -

Tyco Electronics Corporation
Harrisburg, Pa 17105-3608

NAME: MODULAR JACK ASSEMBLY, TOP ENTRY, 6 POSITION, WITHOUT PANEL STOPS

SIZE	CAGE CODE	DRAWING NO	RESTRICTED TO
A2	00779	C-5569984	-

CUSTOMER DRAWING | SCALE 4:1 | SHEET 1 OF 1 | REV B

AMP 1471-9 REV 31MAR2000

5569984

Downloaded from Elcodis.com electronic components distributor