THIS DRAWING IS UNPUBLISHED. RELEASED FOR PUBLICATION 20
© COPYRIGHT 20 BY TYCO ELECTRONICS CORPORATION. ALL RIGHTS RESERVED.

LOC	DIST
AA	22

REVISIONS

P	LTR	DESCRIPTION	DATE	DRN	APVD
	G	REV PER ECR-09-023028	19OCT2009	DZ	SY
	G1	REVISED PER ECO-10-000445	11JAN10	KK	AEG
	G2	REVISED PER ECR-10-004038	24FEB2010	TY	SY
	G3	REVISED PER ECR-10-006919	30MAR2010	TY	SY

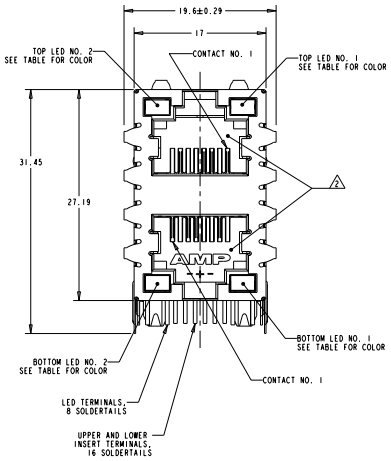

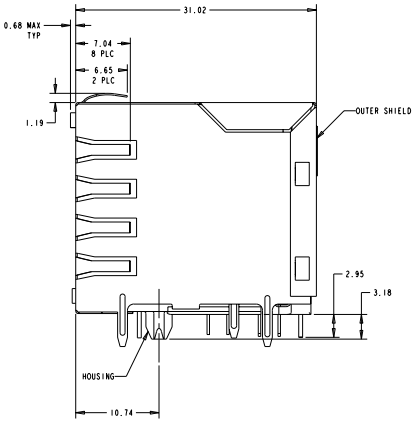

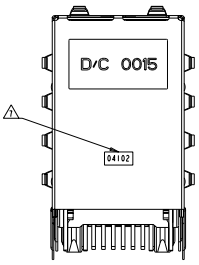

1. MATERIAL: **HOUSING** - PBT POLYESTER, BLACK, UL 94V-0.
TERMINALS - 0.33 THICK PHOSPHOR BRONZE PLATED WITH 1.27um MINIMUM THICK HARD GOLD IN LOCALIZED MATING INTERFACE AND 3.81um MINIMUM THICK MATTE TIN IN SOLDER AREA OVER 1.27um MINIMUM THICK NICKEL UNDERPLATE.
SHIELD - 0.196 THICK COPPER ALLOY PLATED WITH 1.27 um [.000050] MINIMUM NICKEL AND 2.03 um [.000080] MINIMUM HOT TIN DIP ON PCB GROUND TABS..
LIGHT EMITTING DIODE (LED) - DIFUSED EPOXY LENS, 0.51 X 0.51 CARBON STEEL WIREFRAME LEADS PREPLATED WITH 8.89 µm THICK Sn/Cu OVER 2.03 µm THICK Ag OVER 1.02 THICK Cu OVER 3.56 µm THICK Ni OVER 1.02 µm Cu UNDERPLATE

2. JACK CAVITY CONFORMS TO FCC RULES AND REGULATIONS, PART 68 SUBPART F.

3. SUGGESTED OPERATING CURRENT FOR THE LED IS 20mA. GREEN/ORANGE BI-COLOR LEDS ON 6368011-4 AND 1-6368011-0 WILL EMIT GREEN LIGHT ON FORWARD BIAS CURRENT AND ORANGE LIGHT ON REVERSE BIAS CURRENT. GREEN/RED BI-COLOR LEDS ON 6368011-9 AND 1-6368011-0 WILL EMIT GREEN LIGHT ON FORWARD BIAS CURRENT AND RED LIGHT ON REVERSE BIAS CURRENT. GREEN/YEL BI-COLOR LEDS ON 1-6368011-1 WILL EMIT GREEN LIGHT ON FORWARD BIAS CURRENT AND YELLOW LIGHT ON REVERSE BIAS CURRENT.

4. THIS MODULAR JACK WITH INTEGRATED LED IS NOT IR REFLOW SOLDERING PROCESS COMPATIBLE.

5. USE NO. 30 DRILL BIT OR 3.25mm DRILL BIT WHEN PRODUCING THESE PCB HOLES.

6. HM-15 LUBE APPLIED TO THE GOLD PLATED AREA OF THE TERMINALS ON 6368011-8 ONLY.

7. DATE CODE LOCATED ON REAR OF PART APPROX AS SHOWN:
FIRST 2 DIGITS ARE LAST 2 DIGITS OF YEAR,
SECOND 2 DIGITS ARE MANUFACTURING WORK WEEK,
LAST DIGIT IS DAY OF WEEK, WITH SUNDAY=1.

8. THE PART NUMBER IS PRELIMINARY.

9. OBSOLETE PARTS:OBSOLETE CIS STREAMLINING PER D.RENAUD/D.SINISI

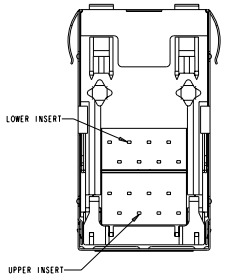

DIM A	BOTTOM LED NO. 2	BOTTOM LED NO. 1	TOP LED NO. 2	TOP LED NO. 1	PART NUMBER
4.14	GREEN	YELLOW	N/A	N/A	1-6368011-3 8
4.14	GREEN/YELLOW	GREEN/YELLOW	GREEN/YELLOW	GREEN/YELLOW	1-6368011-1
4.14	GREEN/ORANGE	GREEN/ORANGE	GREEN/RED	GREEN/RED	1-6368011-0
4.14	GREEN/RED	GREEN/RED	GREEN/RED	GREEN/RED	6368011-9
4.14	YELLOW	GREEN	YELLOW	GREEN	6368011-8 6
4.14	GREEN	ORANGE	N/A	N/A	6368011-7
9 OBSOLETE 4.14	~~GREEN~~	~~GREEN~~	~~YELLOW~~	~~GREEN~~	~~6368011-6~~
4.14	YELLOW	GREEN	YELLOW	GREEN	6368011-5
4.14	GREEN/ORANGE	GREEN/ORANGE	GREEN/ORANGE	GREEN/ORANGE	6368011-4
4.14	GREEN	YELLOW	GREEN	YELLOW	6368011-3
9 OBSOLETE ~~4.14~~	~~YELLOW~~	~~GREEN~~	~~GREEN~~	~~YELLOW~~	~~6368011-2~~
4.14	GREEN	GREEN	GREEN	GREEN	6368011-1

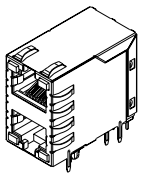

PN 6368011-1,2,3,4,5,6,8
& 1-6368011-0,1
SCALE 2:1

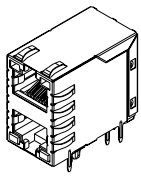

PN 6368011-7
SAME AS 6368011-1
EXCEPT AS SHOWN WITHOUT TOP LED
SCALE 2:1

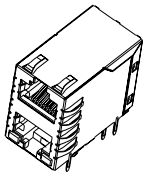

PN 1-6368011-3
SAME AS 6368011-3
EXCEPT AS SHOWN WITHOUT TOP LED
SCALE 2:1

DRN: 13APR2005 Stack/Jack Devices; CHK: 13APR2005 J.WESTMAN	Tyco Electronics Corporation Harrisburg, PA 17105-3608		
DIMENSIONS: mm	TOLERANCES UNLESS OTHERWISE SPECIFIED: 0 PLC ±-; 1 PLC ±-; 2 PLC ±0.25; 3 PLC ±0.25; ANGLES ±-; FINISH ±-	APPR: 13APR2005 S.FLICKINGER	NAME: MODULAR JACK ASSEMBLY,STACKED, 2 X 1, 8 POSITION, SHIELDED, PANEL GROUND, LED, CATEGORY 5
		PRODUCT SPEC: 108-1163-2; APPLICATION SPEC: 114-2154	
MATERIAL: SEE NOTE 1	FINISH: SEE NOTE 1	WEIGHT: -	SIZE: A1; CAGE CODE: 00779; DRAWING NO: C-6368011; RESTRICTED TO: -
CUSTOMER DRAWING			SCALE: 1:1; SHEET 1 OF 3; REV: G3

AMP 4805 REV 31MAR2000

ProENGINEER DRAWING

Downloaded from Elcodis.com electronic components distributor

THIS DRAWING IS UNPUBLISHED. RELEASED FOR PUBLICATION 20
© COPYRIGHT 20 BY TYCO ELECTRONICS CORPORATION. ALL RIGHTS RESERVED.

LOC	DIST
AA	22

REVISIONS

P	LTR	DESCRIPTION	DATE	DWN	APVD
	-	SEE SHEET 1	-	-	-

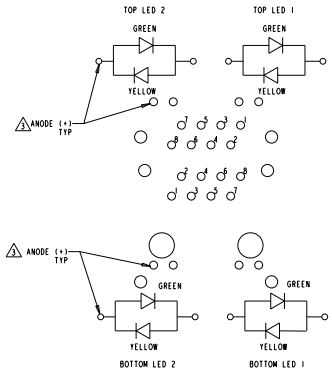

SCHEMATIC FOR 1-6368011-1
SCALE 4:1

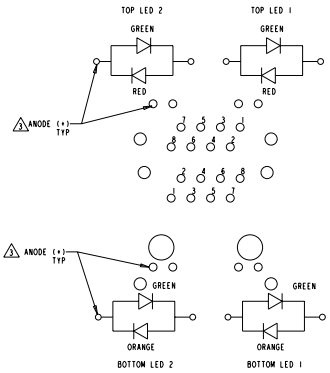

SCHEMATIC FOR 1-6368011-0
SCALE 4:1

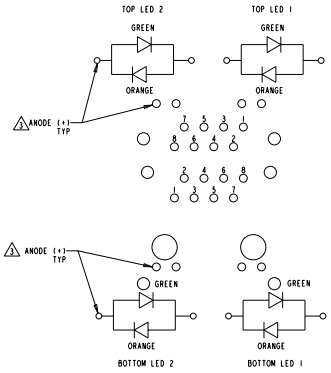

SCHEMATIC FOR 6368011-4
SCALE 4:1

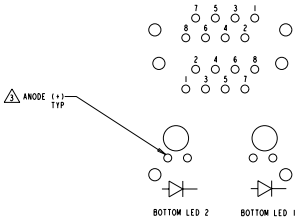

SCHEMATIC FOR 6368011-7,1-6368011-3

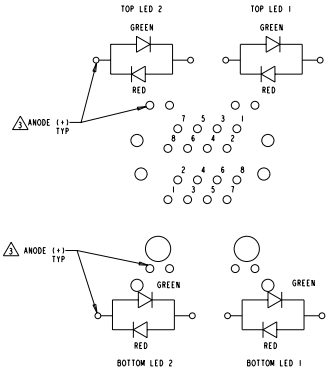

SCHEMATIC FOR 6368011-9
SCALE 4:1

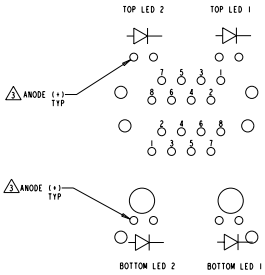

SCHEMATIC FOR 6368011-1, ~~-2~~, -3, -5, ~~-6~~, -8
SCALE 4:1

DIMENSIONS: MM	TOLERANCES UNLESS OTHERWISE SPECIFIED: 0 PLC ±- / 1 PLC ±0.5 / 2 PLC ±0.25 / 3 PLC ±0.25 / ANGLES ±-	DWN 13APR2005 Vic Stanchak / APVD 13APR2005 J WESTMAN	Tyco Electronics Corporation Harrisburg, PA 17105-3608
MATERIAL SEE NOTE 1	FINISH SEE NOTE 1	DATE 13APR2005 S FLICKINGER	NAME MODULAR JACK ASSEMBLY,STACKED, 2 X 1, 8 POSITION, SHIELDED, PANEL GROUND, LED, CATEGORY 5
		PRODUCT SPEC 108-1163-2	
		APPLICATION SPEC 114-2154	
		WEIGHT -	SIZE A1 / CAGE CODE 00779 / DRAWING NO C-6368011 / RESTRICTED TO -
		CUSTOMER DRAWING	SCALE 1:1 / SHEET 2 OF 3 / REV G3

AMP 4805 REV 31MAR2000

Downloaded from Elcodis.com electronic components distributor

THIS DRAWING IS UNPUBLISHED. RELEASED FOR PUBLICATION 20
© COPYRIGHT 20 BY TYCO ELECTRONICS CORPORATION. ALL RIGHTS RESERVED.

LOC	DIST
AA	22

REVISIONS

P	LTR	DESCRIPTION	DATE	DWN	APVD
	-	SEE SHEET 1	-	-	-

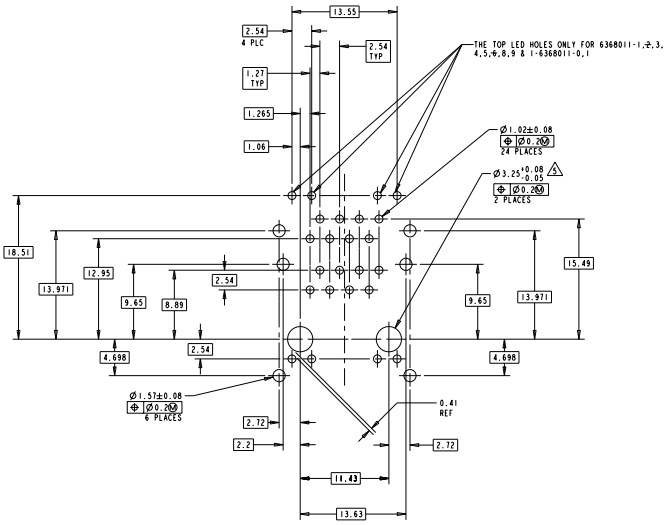

PC BOARD LAYOUT VIEWED FROM COMPONENT SIDE OF BOARD
SCALE 4:1

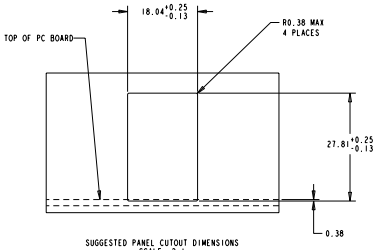

SUGGESTED PANEL CUTOUT DIMENSIONS
SCALE 2:1

THIS DRAWING IS CONSIDERED THE PRIMARY SOURCE OF REFERENCE INFORMATION. IT IS BASED ON SAMPLES FOR THE LATEST REVISION.	DWN 13APR2005 Vic Stackhouse	Tyco Electronics	Tyco Electronics Corporation Harrisburg, PA 17105-3608
	CHK 13APR2005 J. WESTMAN		
DIMENSIONS: mm	DATE 13APR2005 S.FLICKINGER	NAME MODULAR JACK ASSEMBLY,STACKED, 2 X 1, 8 POSITION, SHIELDED, PANEL GROUND, LED, CATEGORY 5	
	PRODUCT SPEC 108-1163-2		
	APPLICATION SPEC 114-2154	SIZE A1	CAGE CODE 00779
	WEIGHT -	DRAWING NO C-6368011	RESTRICTED TO -
MATERIAL SEE NOTE 1	FINISH SEE NOTE 1	CUSTOMER DRAWING	SCALE 1:1 SHEET 3 OF 3 REV G3

TOLERANCES UNLESS OTHERWISE SPECIFIED:
0 PLC ±-
1 PLC ±-
2 PLC ±0.25
3 PLC ±0.25
4 PLC ±-
ANGLES ±-

AMP 4805 REV 31MAR2000

Downloaded from Elcodis.com electronic components distributor