THIS DRAWING IS UNPUBLISHED. RELEASED FOR PUBLICATION
© COPYRIGHT – BY TYCO ELECTRONICS CORPORATION. ALL RIGHTS RESERVED.

| LOC | DIST | REVISIONS | | | | |
|---|---|---|---|---|---|---|
| AA | 22 | P | LTR | DESCRIPTION | DATE | DWN | APVD |
| | | | A1 | REVISED ECR-08-031628 | 04DEC08 | AZ | SY |

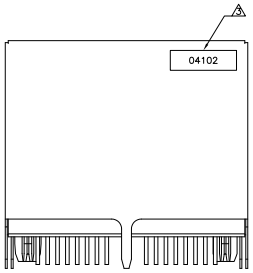


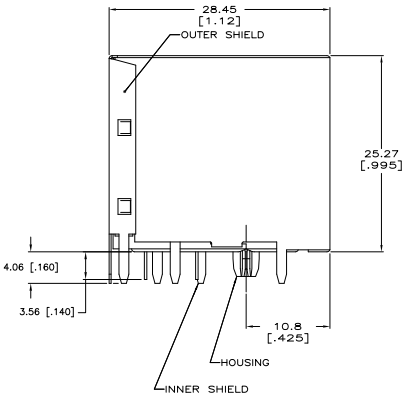


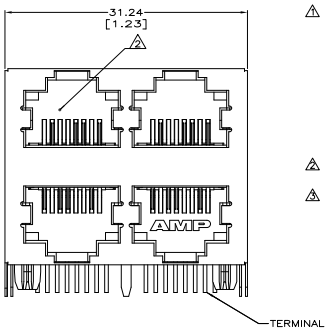


1. MATERIAL:
HOUSING – PCT POLYESTER, BLACK, UL94V-0.
OVERMOLDED TERMINAL ARRAY – PBT, BROWN.
TERMINALS – 0.33 [.013] THICK PHOS BRONZE PLATED WITH 1.27um [.000050] MIN THICK HARD GOLD IN LOCALIZED AREA AND 3.81um [.000150] MIN THICK MATTE TIN IN SOLDER AREA OVER 1.27um [.000050] MIN THICK NICKEL UNDERPLATE.
SHIELDS – 0.25 [.010] THICK COPPER ALLOY PLATED WITH 1.27 um [.000050] MINMUM NICKEL AND 2.03 um [.000080] MINIMUM HOT TIN DIP ON PCB GROUND TABS.

2. JACK CAVITY CONFORMS TO FCC RULES AND REGULATIONS, PART 68 SUBPART F.

3. DATE CODE LOCATED ON REAR OF PART APPROXIMATELY AS SHOWN:
FIRST 2 DIGITS ARE LAST 2 DIGITS OF YEAR,
SECOND 2 DIGITS ARE MANUFACTURING WORK WEEK,
LAST DIGIT IS DAY OF WEEK, WITH SUNDAY = 1.

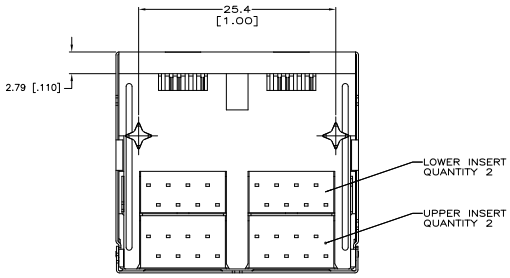


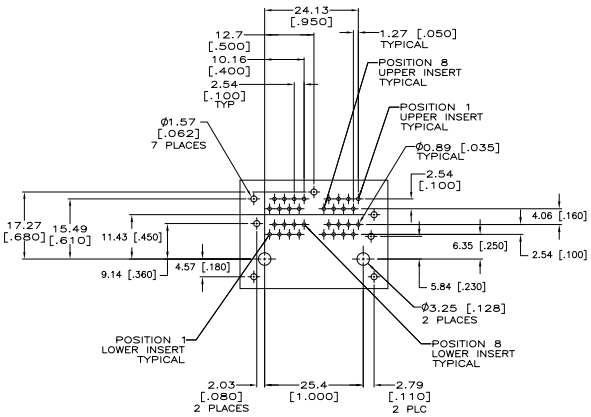


PC BOARD LAYOUT VIEWED FROM COMPONENT SIDE
SCALE 2:1

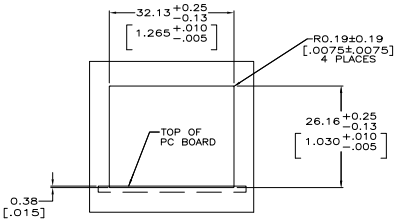


SUGGESTED PANEL CUTOUT DIMENSIONS
SCALE 2:1

5569255-1
PART NUMBER

THIS DRAWING IS A CONTROLLED DOCUMENT.

DIMENSIONS: mm [INCHES]
TOLERANCES UNLESS OTHERWISE SPECIFIED:
0 PLC ± –
1 PLC ± –
2 PLC ± 0.25[.01]
3 PLC ± 0.13[.005]
4 PLC ± –
ANGLES ± –
MATERIAL
FINISH

DWN A. FERNANDEZ-DOCKS
CHK J. WESTMAN
APVD S. FLICKINGER
PRODUCT SPEC 108-1163-2
APPLICATION SPEC 114-2048
WEIGHT –
CUSTOMER DRAWING

Tyco Electronics
Tyco Electronics Corporation
Harrisburg, PA 17105-3608

NAME: STACKED MODULAR JACK ASSEMBLY, 2 X 2 PORT, 8 POSITION, SHIELDED, PRINTED CIRCUIT BOARD GROUND, CATEGORY 5

SIZE A1 | CAGE CODE 00779 | DRAWING NO C-5569255 | RESTRICTED TO –
SCALE 4:1 | SHEET 1 OF 1 | REV A1

AMP 4805 REV 31MAR2000

Downloaded from Elcodis.com electronic components distributor