THIS DRAWING IS UNPUBLISHED. RELEASED FOR PUBLICATION -.- .
© COPYRIGHT - BY TYCO ELECTRONICS CORPORATION. ALL RIGHTS RESERVED.

LOC	DIST
AA	00

REVISIONS

P	LTR	DESCRIPTION	DATE	DWN	APVD
	C	REV PER ECR-08-032447	19FEB2009	DZ	SY

1. MATERIAL:
   HOUSING – NYLON, COLOR: BLACK, UL 94V-0.
   OVERMOLDED TERMINAL ARRAY – PBT, BROWN.
   TERMINALS – 0.33 [.013] THICK PHOS BRONZE PLATED WITH 1.27µm [.000050] THICK HARD GOLD IN LOCALIZED AREA AND 3.81µm [.000150] THICK MATTE TIN IN SOLDER AREA OVER 1.27µm [.000050] THICK NICKEL UNDERPLATE.
   SHIELD – 0.254 [.010] THICK COPPER ALLOY PLATED WITH 1.27µm [.000050] MINIMUM NICKEL AND 2.03µm [.000080] MINIMUM HOT TIN DIP ON PCB GROUND TABS.

2. JACK CAVITY COMFORMS TO FCC RULES AND REGULATIONS, PART 68 SUBPART F.

3. THIS HOLE REQUIRED FOR –2 ONLY.

4. REAR GROUND TAB NOT REQUIRED FOR –1.

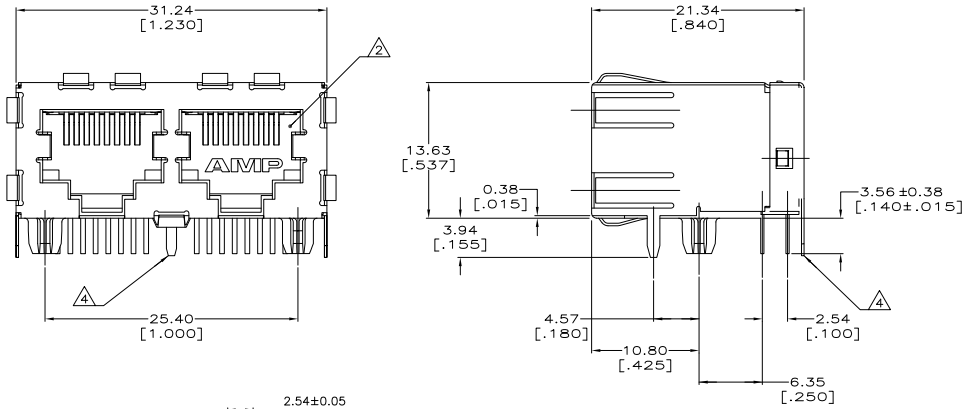

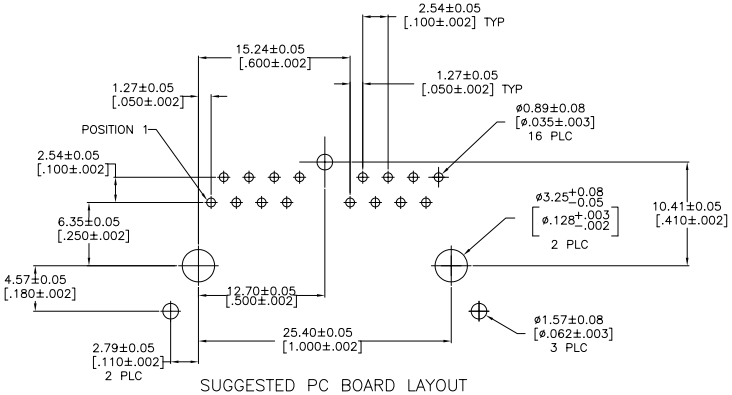

SUGGESTED PC BOARD LAYOUT
COMPONENT SIDE
SEE APPLICATION SPECIFICATION

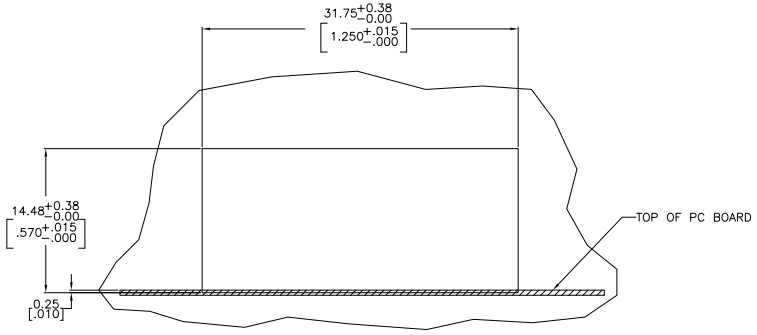

SUGGESTED PANEL CUTOUT

WITH REAR PCB GROUND TAB	5406566-2
WITHOUT REAR PCB GROUND TAB	5406566-1
DESCRIPTION	PART NO.

THIS DRAWING IS A CONTROLLED DOCUMENT.

DIMENSIONS: mm [INCHES]

TOLERANCES UNLESS OTHERWISE SPECIFIED:
0 PLC ± –
1 PLC ± .
2 PLC ± 0.25[.01]
3 PLC ± 0.13[.005]
4 PLC ± –
ANGLES ± –

MATERIAL: SEE NOTE 1
FINISH: SEE NOTE 1

DWN J. ALCORTA – DOCKS 16JUN2005
CHK J. WESTMAN 16JUN2005
APVD S. FLICKINGER 16JUN2005
PRODUCT SPEC 108-1163-2
APPLICATION SPEC 114-2048
WEIGHT –

Tyco Electronics
Tyco Electronics Corporation
Harrisburg, PA 17105-3608

NAME: MODULAR JACK ASSEMBLY, 2 PORT, 8 POSITION, RIGHT ANGLE, SHIELDED, CAT 5

SIZE A1 | CAGE CODE 00779 | DRAWING NO C-5406566 | RESTRICTED TO –

CUSTOMER DRAWING | SCALE 4:1 | SHEET 1 OF 1 | REV C

AMP 4805 REV 31MAR2000

Downloaded from Elcodis.com electronic components distributor