THIS DRAWING IS UNPUBLISHED. RELEASED FOR PUBLICATION -.- .
© COPYRIGHT - By - ALL RIGHTS RESERVED.

LOC	DIST
AA	00

REVISIONS

P	LTR	DESCRIPTION	DATE	DWN	APVD
	B2	REVISED PER ECO-11-005033	28MAR11	RK	HMR

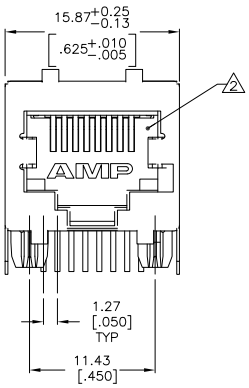

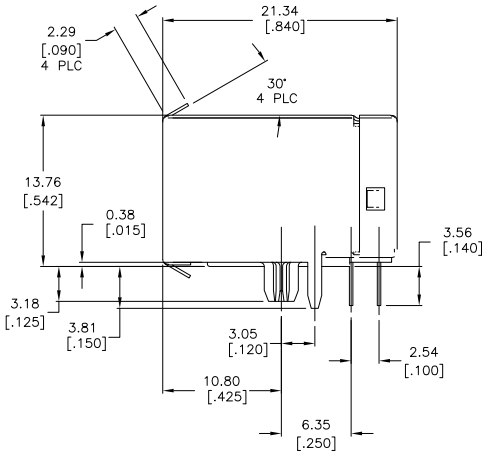

1 MATERIAL: HOUSING HIGH TEMPERATURE NYLON, BLACK, IR COMPATIBLE, UL 94V-O.
TERMINALS - 0.33[.013] THICK PHOS BRONZE PLATED WITH 1.27μm[.000050] MINIMUM THICK HARD GOLD IN LOCALIZED AREA AND 3.81μm [.000150] MINIMUM THICK MATTE TIN IN SOLDER AREA OVER 1.27μm[.000050] MINIMUM THICK NICKEL UNDERPLATE.
SHIELDS - 0.254[.010] THICK COPPER ALLOY PLATED WITH 1.27μm[.000050] MINIMUM NICKEL AND 2.03μm [.000080] HOT TIN DIP ON PCB GROUND TABS.

2 JACK CAVITY CONFORMS TO FCC RULES AND REGULATIONS, PART 68 SUBPART F.

3 CAUTION: CATEGORY 5 JACK SOLDER TAIL POSITIONS DO NOT FOLLOW SAME NUMBER SEQUENCE AS THAT OF TRADITIONAL JACKS.

4 USE #30 DRILL BIT OR 3.25mm DRILL BIT WHEN PRODUCING THESE PCB HOLES.

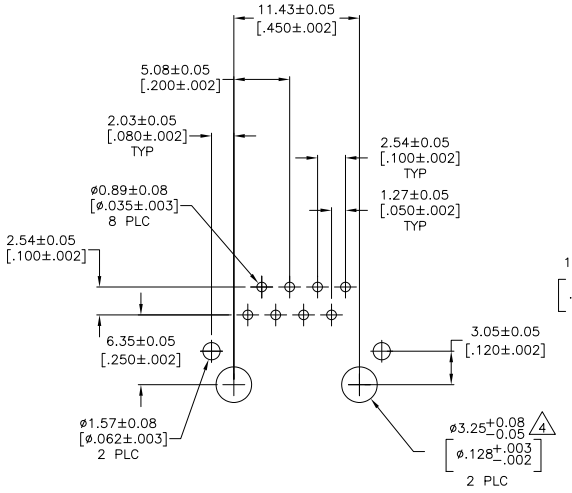

SUGGESTED PC BOARD LAYOUT
COMPONENT SIDE

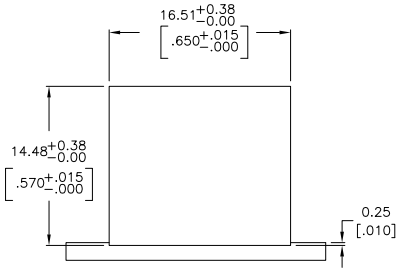

SUGGESTED PANEL CUTOUT

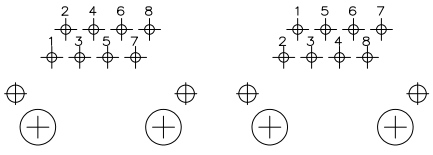

TRADITIONAL JACK 3 CATEGORY 5 JACK

5558344

5558344-1
PART NUMBER

THIS DRAWING IS A CONTROLLED DOCUMENT.

DIMENSIONS: mm

TOLERANCES UNLESS OTHERWISE SPECIFIED:
0 PLC ± -
1 PLC ± -
2 PLC ± 0.25[.010]
3 PLC ± -
4 PLC ± -
ANGLES ± -

MATERIAL: SEE NOTE 1
FINISH: SEE NOTE 1

DWN T. PITTS/L.A.MAYER 08JUNE2005
CHK J.WESTMAN 08JUNE2005
APVD S.FLICKINGER 08JUNE2005
PRODUCT SPEC 108-1163
APPLICATION SPEC 114-2048
WEIGHT -

TE Connectivity

NAME: MODULAR JACK ASSEMBLY, 8 POSITION, RIGHT ANGLE,LOW PROFILE,SHIELDED, PANEL GROUND, CATEGORY 5

SIZE	CAGE CODE	DRAWING NO	RESTRICTED TO
A2	00779	C-5558344	-

CUSTOMER DRAWING | SCALE 2:1 | SHEET 1 OF 1 | REV B2

1471-9 (3/11)

Downloaded from Elcodis.com electronic components distributor