THIS DRAWING IS UNPUBLISHED. RELEASED FOR PUBLICATION -.-.-
© COPYRIGHT - BY TYCO ELECTRONICS CORPORATION. ALL RIGHTS RESERVED.

UOC	DIST
AA	00

REVISIONS

P	LTR	DESCRIPTION	DATE	DRN	APVD
	C	ECO-07-017784	10AUG07	LAM	PR

1. MATERIAL:
HOUSING– PBT POLYESTER, GRAY.
TERMINAL– 0.36µm[.014] THICK PHOS BRONZE PLATED WITH 1.27µm[.000050] MINIMUM THICK HARD GOLD LOCALIZED GOLD PLATE AREA AND 3.81µm[.000150] MINIMUM THICK MATTE TIN IN SOLDER AREA OVER 1.27µm[.000050] MINIMUM THICK NICKEL UNDERPLATE.

2. CAVITY CONFORMS TO FCC RULES AND REGULATIONS PART 68 AND REA BULLENTIN 345–81, PE–76 SPECIFICATION FOR MODULAR TELEPHONE HARDWARE

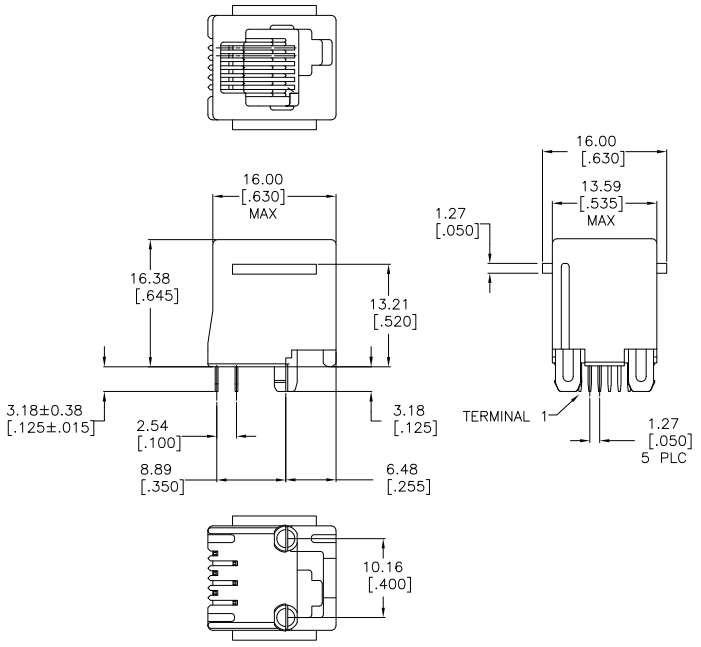

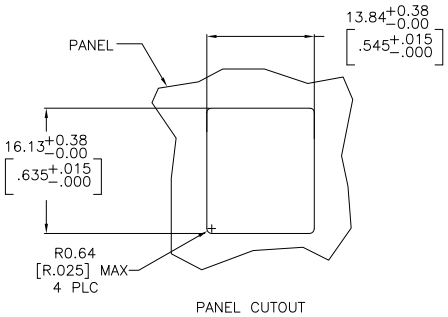

PANEL CUTOUT

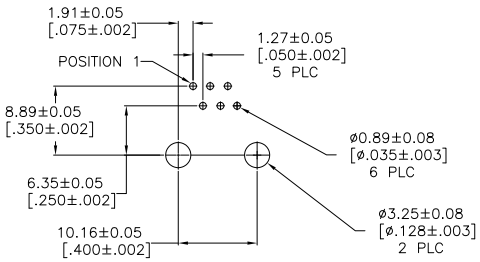

SUGGESTED PRINTED CIRCUIT
BOARD LAYOUT
COMPONENT SIDE

5554990–1
PART NO

THIS DRAWING IS A CONTROLLED DOCUMENT.	DRN L.A.MAYER 15AUG2007	Tyco Electronics Corporation Harrisburg, PA 17105–3608
DIMENSIONS: mm [INCHES]	CHK P.REECE 15AUG2007	NAME MODULAR JACK ASSEMBLY, TOP ENTRY, 6 POSITION, FLANGELESS, W/ PANEL STOPS, RIGHT LATCH
TOLERANCE UNLESS OTHERWISE SPECIFIED: 0 PLC ± – ; 1 PLC ± – ; 2 PLC ± 0.13[.005] ; 3 PLC ± – ; 4 PLC ± – ; ANGLES ± –	APVD S.FLICKINGER 15AUG2007	PRODUCT SPEC 108–1163
		APPLICATION SPEC 114–2048
MATERIAL SEE NOTE 1	FINISH SEE NOTE 1	WEIGHT –
CUSTOMER DRAWING		SIZE A1 CAGE CODE 00779 DRAWING NO C–5554990
		SCALE 4:1 SHEET 1 OF 1 REV C
		RESTRICTED TO –

AMP 4805 REV 31MAR2000

Downloaded from Elcodis.com electronic components distributor