THIS DRAWING IS UNPUBLISHED. RELEASED FOR PUBLICATION 19
© COPYRIGHT 20 BY TYCO ELECTRONICS CORPORATION. ALL RIGHTS RESERVED.

LOC	DIST
HM	00

REVISIONS

P	LTR	DESCRIPTION	DATE	DRN	APVD
	A	RELEASED; NSD07-013	13MAR2007	GG	GB
	B	REV ECO-11-000935	14JUN2011	LH	RA

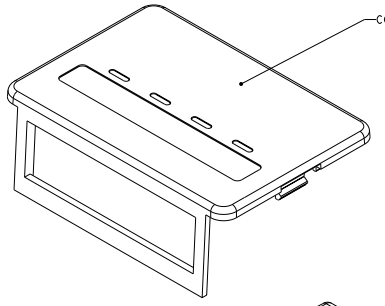

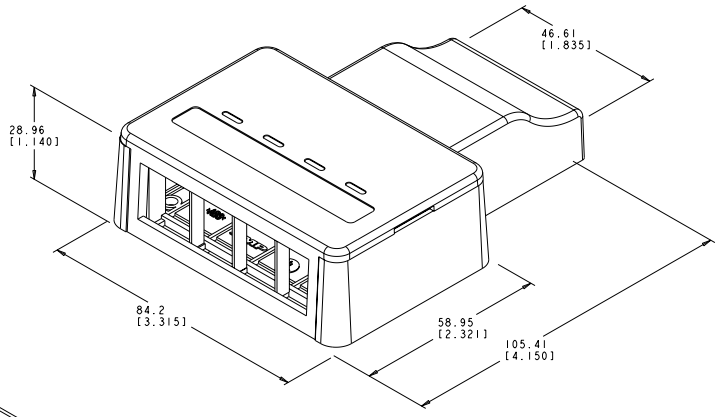

ASSEMBLED VIEW

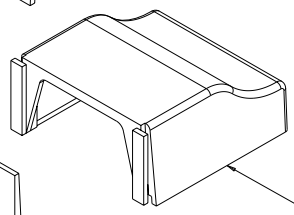

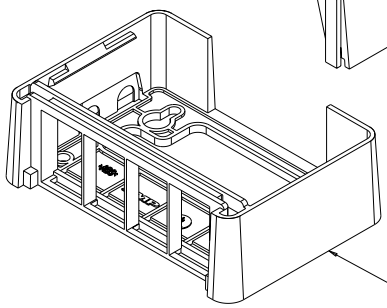

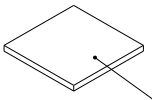

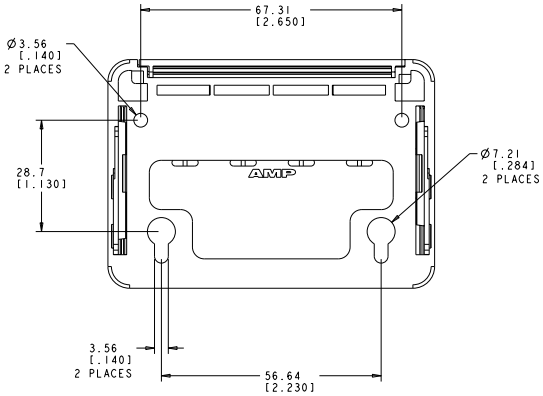

BOTTOM VIEW
MOUNTING DIMENSIONS

1. MATERIAL:
   BASE, COVER AND EXTENDER - ABS MOLDING COMPOUND. SEE TABLE FOR COLOR.
   FOAM TAPE - DOUBLE SIDED ADHESIVE. POLYETHYLENE.
   SCREWS - ZINC PLATED CARBON STEEL.

2. DIMENSIONS ARE NOMINAL UNLESS OTHERWISE SPECIFIED.

3. KIT SHIPPED NOT ASSEMBLED.

COLOR	PART NUMBER
ELECTRIC IVORY	1-1933288-1
NEMA GRAY	1933288-4
WHITE	1933288-3
BLACK	1933288-2
LIGHT ALMOND	1933288-1

THIS DRAWING IS A CONFIDENTIAL DOCUMENT AND THE INFORMATION CONTAINED HEREIN MAY NOT BE DISCLOSED OR REPRODUCED WITHOUT THE WRITTEN AUTHORITY OF TYCO ELECTRONICS CORPORATION.

DIMENSIONS: mm[INCHES]

TOLERANCES UNLESS OTHERWISE SPECIFIED:
0 PLC ±:
1 PLC ±:
2 PLC ±:
3 PLC ±:
4 PLC ±:
ANGLES ±:

MATERIAL : 1
FINISH : 1

DWN G. GARRETT 13MAR2007
CHK G. BOWMAN 13MAR2007
APVD G. BOWMAN 13MAR2007

PRODUCT SPEC -
APPLICATION SPEC 408-8399
WEIGHT -

Tyco Electronics
Tyco Electronics
Harrisburg, PA 17105-3608

NAME -
KIT, OFFICE BOX, EXTENDER, 4 PORT

SIZE A1 | CAGE CODE 00779 | DRAWING NO C-1933288 | RESTRICTED TO -

CUSTOMER DRAWING | SCALE 2:1 | SHEET 1 OF 1 | REV B

AMP 4805 REV 31MAR2000
Pro/ENGINEER DRAWING

Downloaded from Elcodis.com electronic components distributor