THIS DRAWING IS UNPUBLISHED. RELEASED FOR PUBLICATION -/-/-
© COPYRIGHT - BY TYCO ELECTRONICS CORPORATION. ALL RIGHTS RESERVED.

USC	DIST
GP	00

REVISIONS

P	LTR	DESCRIPTION	DATE	DRN	APVD
	O	RELEASED PER EC 0513-0131-05	23JUN05	BM	JG

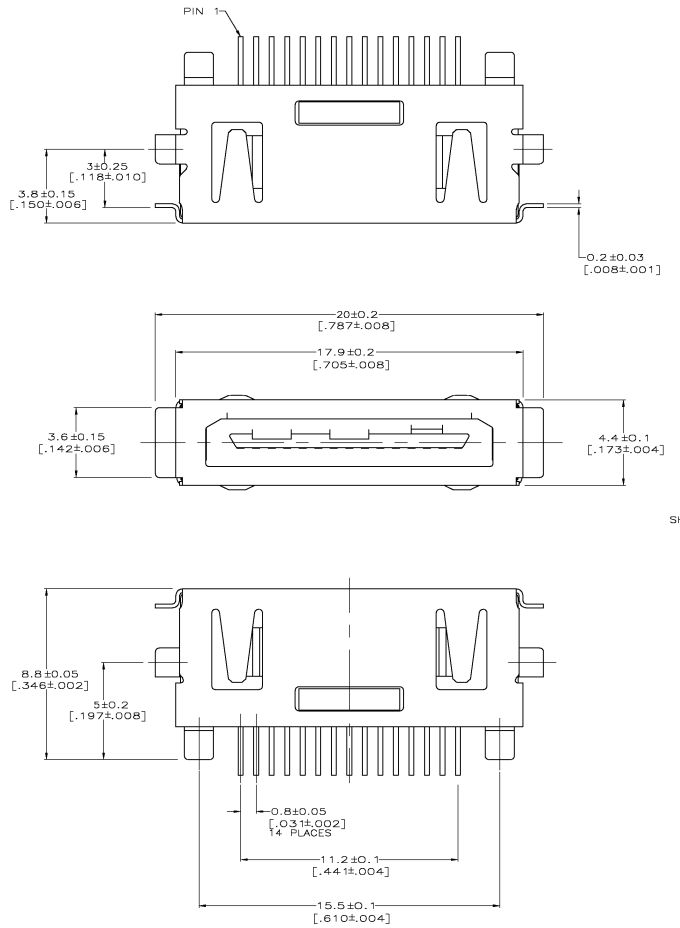

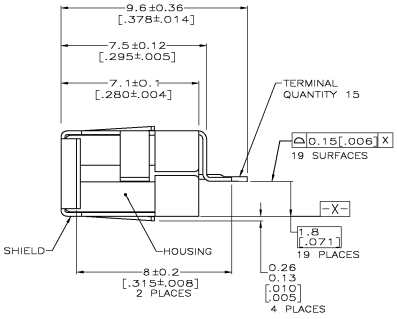

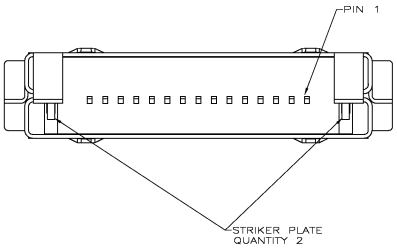

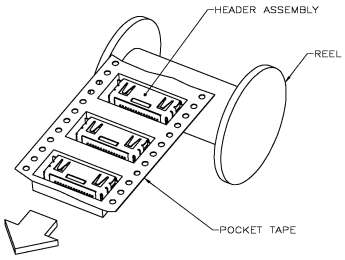

1. MATERIAL: HOUSING – NYLON MOLDING COMPOUND, 94V-0, GLASS FILLED, BLACK. TERMINALS – 0.25[.010] THICK BRASS PLATED WITH 0.254 MICRONS[.000010] MINIMUM THICK GOLD OVER 1.016 MICRONS [.000040] MINIMUM THICK PALADIUM NICKEL OVER 0.05 MICRONS[.000002] MINIMUM THICK GOLD IN CONTACT AREAS AND 3.8 MICRONS[.000150] MINIMUM THICK TIN ON SOLDER TINES OVER 2.54 MICRONS[.000100] MINIMUM THICK NICKEL UNDERPLATE.
SHIELD – STAINLESS STEEL, TIN PLATED
STRIKER PLATE– STAINLESS STEEL.

2. PACKAGED IN TAPE AND REEL.

KEYING OPTION	PART NUMBER
KEY 5–15	5–5558556–5
KEY 4–15	5–5558556–4
KEY 3–15	5–5558556–3
KEY 2–15	5–5558556–2
KEY 1–15	5–5558556–1

THIS DRAWING IS A CONTROLLED DOCUMENT.

DIMENSIONS: mm [INCHES]
TOLERANCE UNLESS OTHERWISE SPECIFIED:
0 PLC ± –
1 PLC ± –
2 PLC ± –
3 PLC ± –
4 PLC ± –
ANGLES ± –
MATERIAL 1
FINISH 1

DWN D.McMASTER 23JUN05
CHK D.GORENC 23JUN05
APVD M.WALMSLEY 23JUN05
PRODUCT SPEC –
APPLICATION SPEC –
WEIGHT –

Tyco Electronics Corporation
Harrisburg, Pa 17105-3608

NAME HEADER ASSEMBLY, SHIELDED, SERIES III INFOPORT –

SIZE A1 | CAGE CODE 00779 | DRAWING NO C-5558556 | RESTRICTED TO –

CUSTOMER DRAWING | SCALE 10:1 | SHEET 1 OF 2 | REV O

AMP 4805 REV 31MAR2000

Downloaded from Elcodis.com electronic components distributor

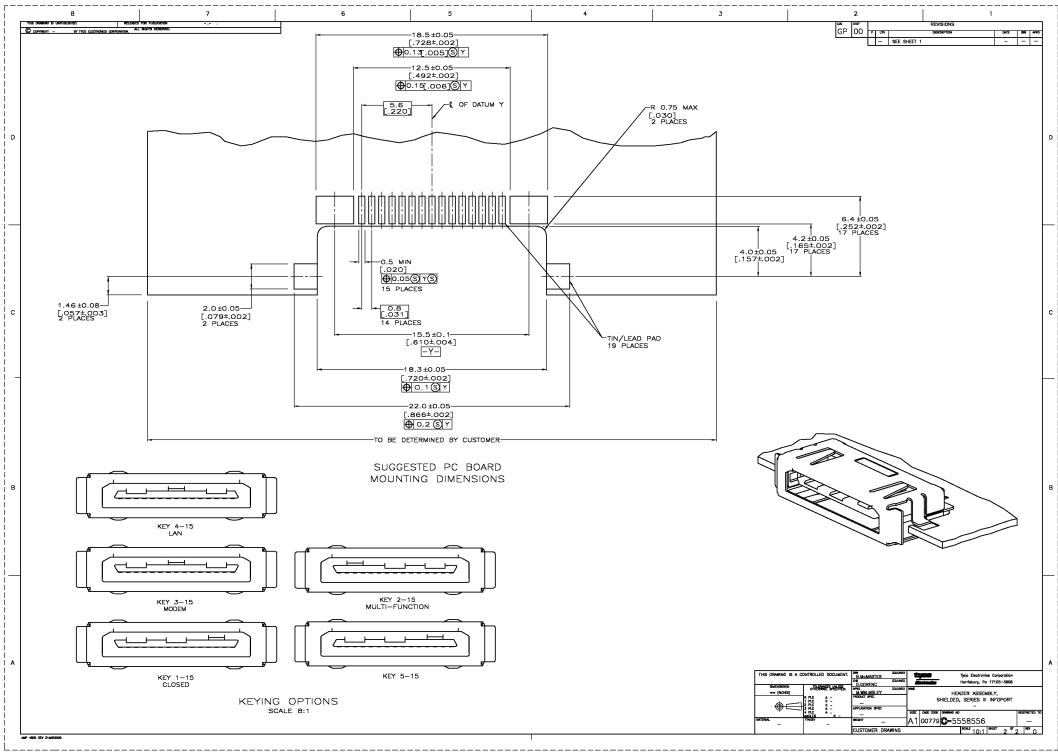

Downloaded from Elcodis.com electronic components distributor