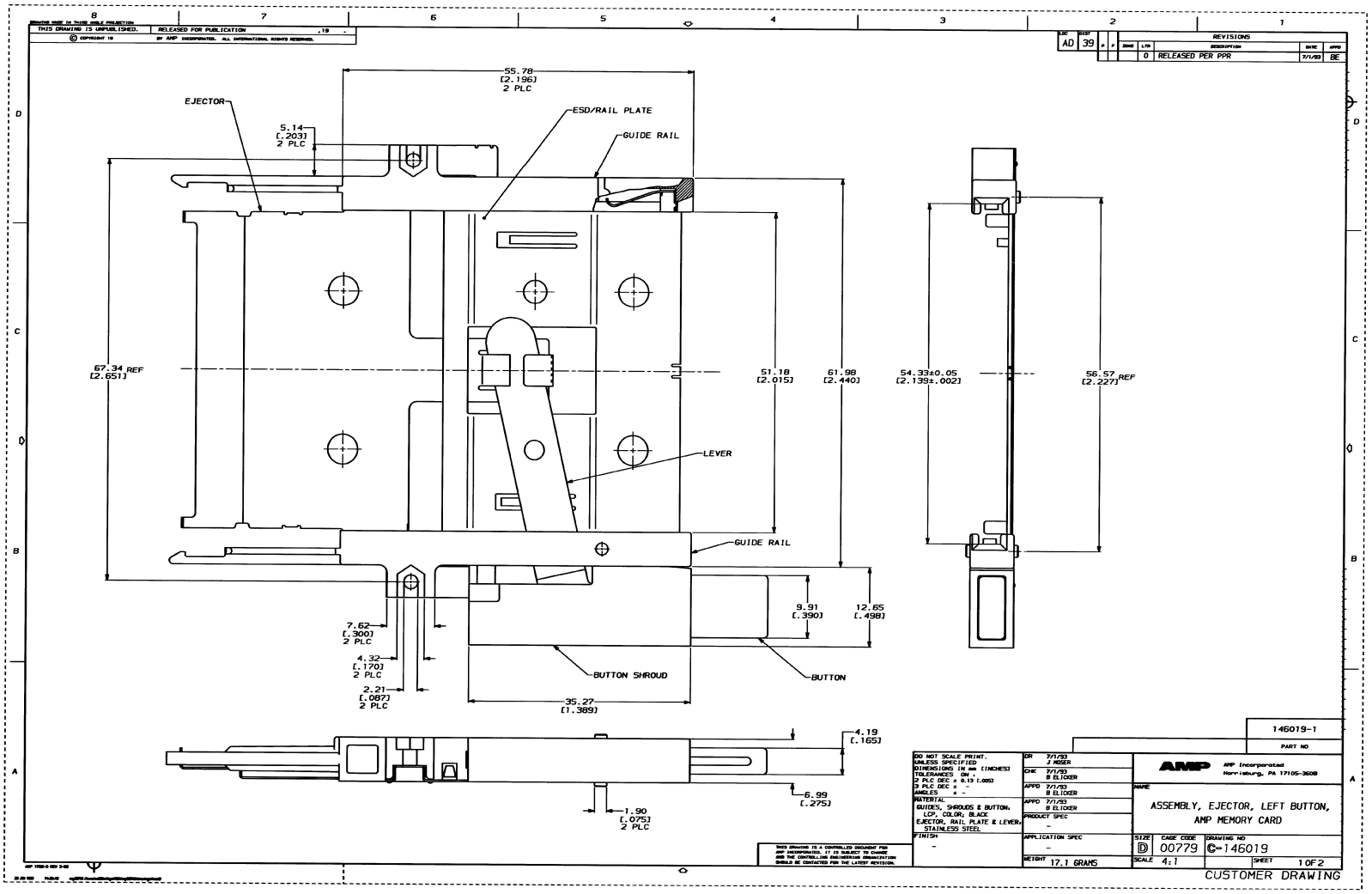

Downloaded from Elcodis.com electronic components distributor

DRAWING MADE IN THIRD ANGLE PROJECTION
THIS DRAWING IS UNPUBLISHED. RELEASED FOR PUBLICATION ,19 .
© COPYRIGHT 19 BY AMP INCORPORATED. ALL INTERNATIONAL RIGHTS RESERVED.

REVISIONS			
ZONE	LTR	DESCRIPTION	DATE	APPD
	0	SEE SHEET ONE	-	-

1. HEADER MOUNTING HOLE LOCATIONS
2. DATUMS & BASIC DIMENSIONS ESTABLISHED BY CUSTOMER.
3. ASSEMBLY REQUIRES USE OF 2-SIZE 2M SCREWS FOR FASTENING TO PRINTED CIRCUIT BOARD.

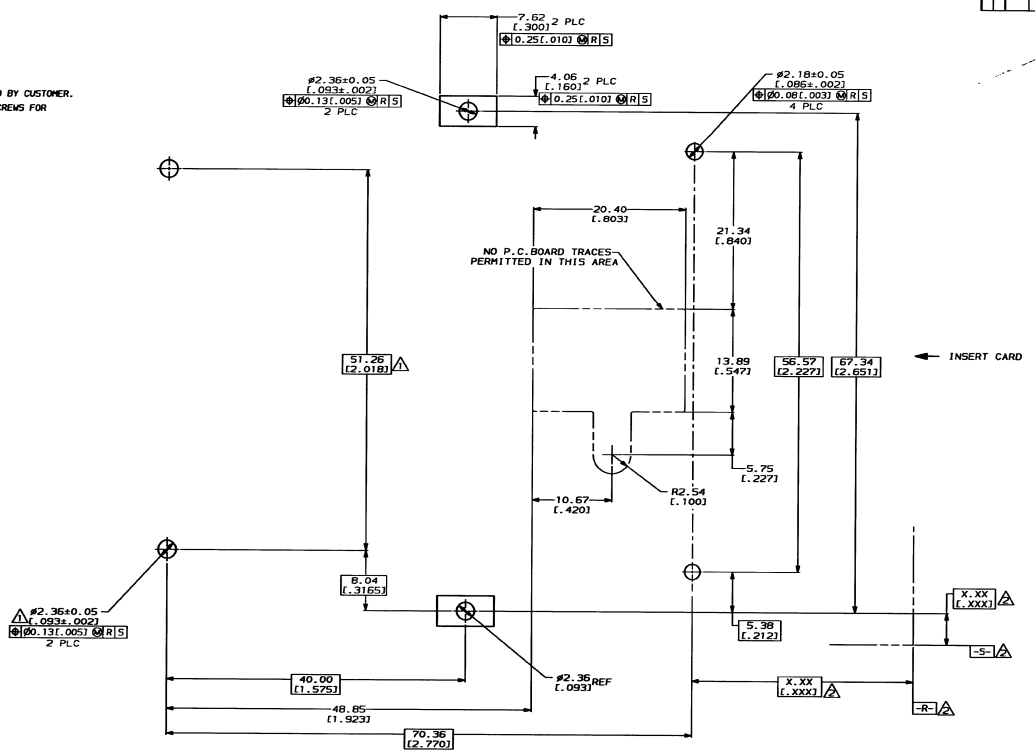

RECOMMENDED BOARD LAYOUT

DO NOT SCALE PRINT. UNLESS SPECIFIED DIMENSIONS IN mm [INCHES] TOLERANCES ON : 2 PLC DEC ± 0.13 [.005] 3 PLC DEC ± - ANGLES ± -	DR 7/1/93 J MOSER	AMP Incorporated Harrisburg, PA 17105-3608	PART NO
	CHK 7/1/93 B ELICKER	NAME ASSEMBLY, EJECTOR, LEFT BUTTON, AMP MEMORY CARD	
	APPD 7/1/93 B ELICKER		
MATERIAL -	APPD 7/1/93 B ELICKER		
	PRODUCT SPEC -		
FINISH -	APPLICATION SPEC -	SIZE D CAGE CODE 00779	DRAWING NO C-146019
	WEIGHT -	SCALE 4:1	SHEET 2OF2

THIS DRAWING IS A CONTROLLED DOCUMENT FOR AMP INCORPORATED. IT IS SUBJECT TO CHANGE AND THE CONTROLLING ENGINEERING ORGANIZATION SHOULD BE CONTACTED FOR THE LATEST REVISION.

CUSTOMER DRAWING

Downloaded from Elcodis.com electronic components distributor