THIS DRAWING IS UNPUBLISHED. RELEASED FOR PUBLICATION 20
© COPYRIGHT 20 BY TYCO ELECTRONICS CORPORATION. ALL RIGHTS RESERVED.

LOC	DIST
DY	-

REVISIONS

P	LTR	DESCRIPTION	DATE	DWN	APVD
	L	REVISED PER FP00-0321-02	19NOV2002	LSK	ET
	M	REVISED FP00-0083-03	21MAR03	LMY	LSF
	N	REVISED ECR-05-007151	28JUL05	SYJ	LSF
	P	REVISED PER ECR-10-007050	12APR2010	SYJ	LSF

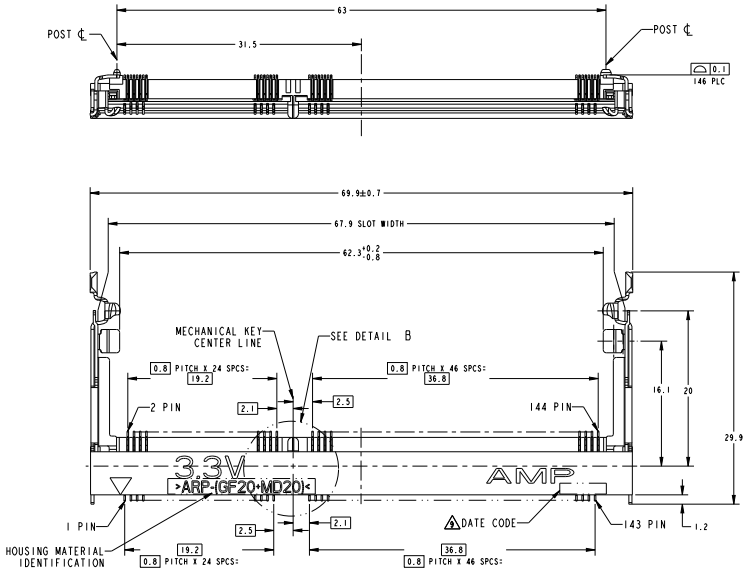

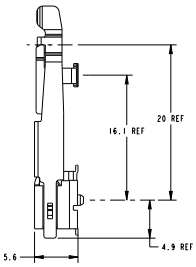

1. MATERIAL, HOUSING, HIGH TEMPERATURE PLASTIC UL94V-0, NAT.
   CONTACT: COPPER ALLOY
   LOCK LEVER: SUS301 TIN PLATING.
2. FINISH; CONTACT AREA: 0.00025 MIN GOLD PLATE ON 0.001 MIN ALL OVER NICKEL
   SOLDERING AREA: 0.00005 MIN TO 0.00030 MAX GOLD PLATE
3. TOLERANCES NON-ACCUMULATIVE.
4. PART TO BE PACKAGED PER EIA IS-704 STANDARD. REEL DIAMETER IS 559 mm, TAPE WIDTH IS 88 mm, AND TAPE PITCH IS 36 mm.
5. PACKAGED IN HARD TRAY.
6. FINISH: CONTACT AREA: 0.00025 MIN GOLD PLATE ON 0.001 MIN ALL OVER NICKEL
   SOLDERING AREA: BRIGHT TIN-LEAD
7. PART PACKAGED PER EIA IS-704 STANDARD. REEL DIAMETER SHALL BE 330mm, TAPE WIDTH SHALL BE 88mm, AND TAPE PITCH SHALL BE 36mm.
8. REVERSE REELING.
9. DATE CODE (4-DIGITS), LOCATED AS SHOWN.
   TO BE INTERPRETED AS FOLLOWS:
   DIGIT # 1 - LAST DIGIT OF YEAR.
   DIGITS # 2 AND # 3 - CALENDAR WEEK.
   DIGIT # 4 - DAY OF THE WEEK (WITH SUNDAYS AS DAY 1).

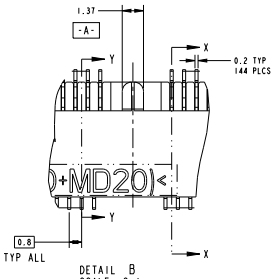

DETAIL B
SCALE 8:1

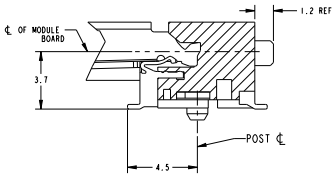

SECTION X-X
SCALE 8:1
ROTATED 90° CCW

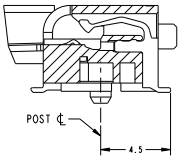

SECTION Y-Y
SCALE 8:1
ROTATED 90° CCW

NIL	AVAILABLE	2	GRAM 3.3V	144	9-390111-2 1 6
NIL	AVAILABLE	2	GRAM 3.3V	144	9-390111-1 1
9-390111-1	NOT AVAILABLE	6	GRAM 3.3V	144	6-390111-4 4
9-390111-1	NOT AVAILABLE	2	GRAM 3.3V	144	6-390111-1 4
3-390111-1	NOT AVAILABLE	6	GRAM 3.3V	144	3-390111-4 5
NIL	AVAILABLE	2	GRAM 3.3V	144	3-390111-1 5
390111-1	NOT AVAILABLE	6	GRAM 3.3V	144	390111-4
NIL	AVAILABLE	2	GRAM 3.3V	144	390111-1
SUPERSEDED BY	REMARKS	FINISH	POWER SUPPLY	POS	PART NUMBER

THIS DRAWING IS A CONFIDENTIAL PROPRIETARY DOCUMENT OF TYCO ELECTRONICS CORPORATION. NOT TO BE REPRODUCED OR DISCLOSED WITHOUT WRITTEN PERMISSION.

DIMENSIONS: MM

TOLERANCES UNLESS OTHERWISE SPECIFIED:
B PLC ±0.2
Y PLC ±0.2
X PLC ±0.2
Z PLC ±-
ANGLES ±-

MATERIAL: 1

FINISH: SEE TABLE

DWN	D. SORAH	6-23-97
CHK	R. TALLEY	6-23-97
APVD	SF LEONG	
PRODUCT SPEC	108-1739	
APPLICATION SPEC	114-1114	
WEIGHT	-	

TYCO ELECTRONICS SINGAPORE

NAME: S.O. DIMM, SOCKET ASSY, 0.8mm, 3.3V 144 POSITION, 3.7 MM PROFILE FOR SGRAM TYPE MODULE

SIZE	CAGE CODE	DRAWING NO	RESTRICTED TO
A1	00779	C-390111	-

CUSTOMER DRAWING

SCALE 4:1 SHEET 1 OF 2 REV P

AMP 4005 REV 31MAR2000

Downloaded from Elcodis.com electronic components distributor

THIS DRAWING IS UNPUBLISHED. RELEASED FOR PUBLICATION 20
© COPYRIGHT 20 BY TYCO ELECTRONICS CORPORATION. ALL RIGHTS RESERVED.

LOC	DIST
DY	-

REVISIONS

P	LTR	DESCRIPTION	DATE	DWN	APVD
	-	SEE SHEET 1	-	-	-

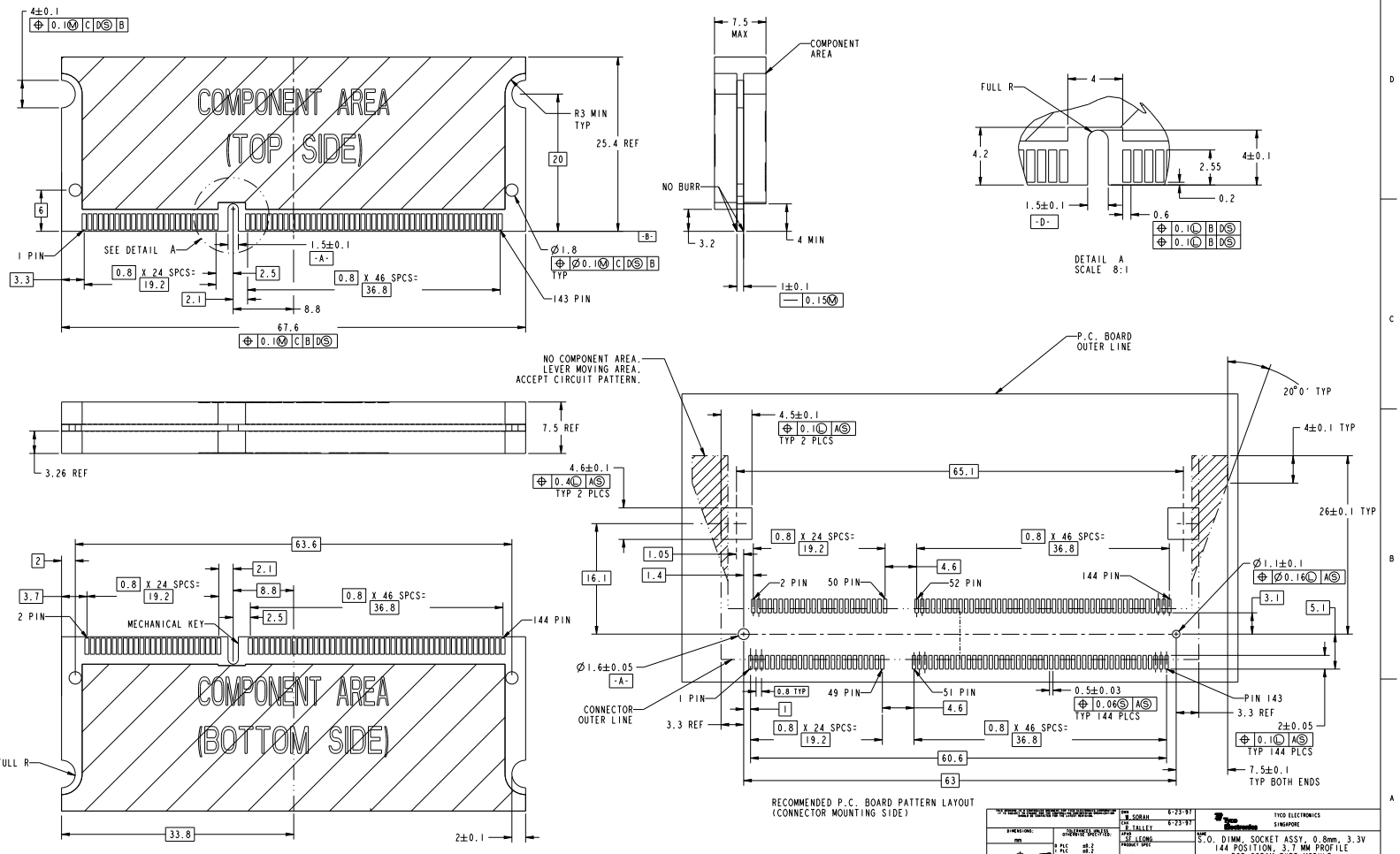

DWN	D. SORAH	6-23-97
CHK	R. TALLEY	6-23-97
APVD	SF LEONG	
PRODUCT SPEC	-	
APPLICATION SPEC	-	
WEIGHT	-	

TYCO ELECTRONICS SINGAPORE

NAME: S.O. DIMM, SOCKET ASSY, 0.8mm, 3.3V 144 POSITION, 3.7 MM PROFILE FOR SGRAM TYPE MODULE

SIZE	CAGE CODE	DRAWING NO	RESTRICTED TO
A1	00779	C-390111	-

CUSTOMER DRAWING — SCALE 4:1 — SHEET 2 OF 2 — REV P

DIMENSIONS: MM — TOLERANCES UNLESS OTHERWISE SPECIFIED: 0 PLC ±0.2, 1 PLC ±0.1, 2 PLC ±0.03, 3 PLC ±-, 4 PLC ±-, ANGLES ±-

MATERIAL — FINISH: SEE TABLE

AMP 4005 REV 31MAR2000

Downloaded from Elcodis.com electronic components distributor