THIS DRAWING IS UNPUBLISHED. RELEASED FOR PUBLICATION 2006
© COPYRIGHT 2006 BY TYCO ELECTRONICS CORPORATION. ALL RIGHTS RESERVED.

LOC	DIST
A1	-

REVISIONS

#	LTR	DESCRIPTION	DATE	DRN	APVD
	B5	PN 29 and 30 added ECR-08-029639	25NOV2008	SR	PF
	B6	Table changed ECR-09-005558	10MAR2009	SR	AD

PANEL CUT-OUT

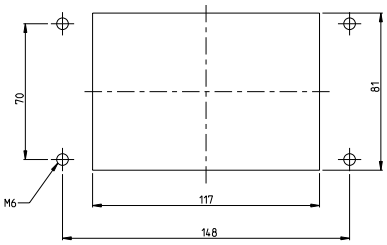

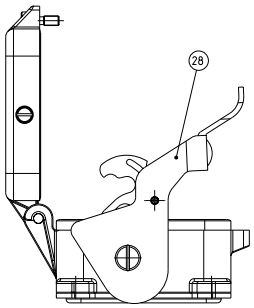

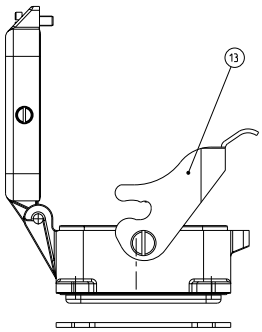

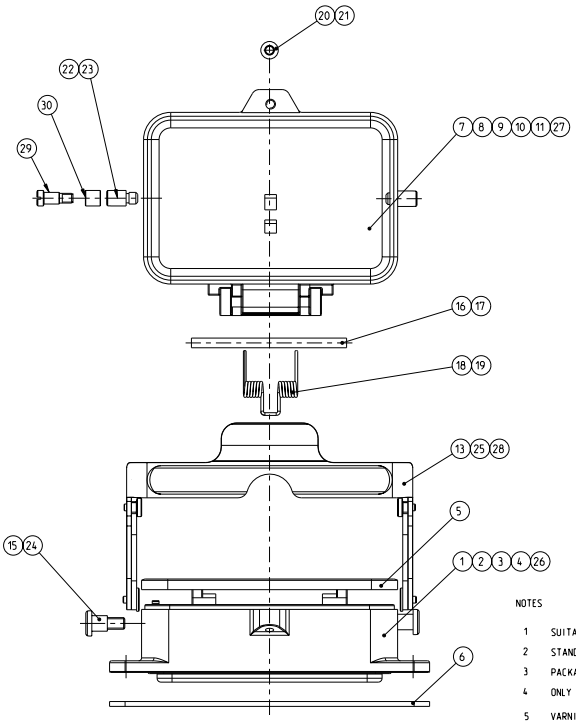

NOTES

1 SUITABLE HOOD: SERIES HB.48

2 STANDARD: DIN EN 61984. DIN EN 60664-1

3 PACKAGING: QUANTITY 3 PIECES

4 ONLY FOR PN 0-2: SURFACE MOUNTED HOUSING WITHOUT HTS-LOGO

5 VARNISHING INSIDE HOUSING NOT REQUIRED

	0-5	0-4	0-3	0-2	0-1	2-2	1-2	DESCRIPTION	MATERIAL	SURFACE	COLOR	ITEM	NOTES
	2							SLIDE SPOOL HB.48	X6CrMoS17	BLANC		30	
	2							CLIP BOLT	STAINLESS STEEL	BLANC		29	M5
	1				1			SIDE CLIP STÄUBLI	STAINLESS STEEL	BLANC		28	
	1							COVER	ALUMINIUM		GREY	27	NEUTRAL, M5 - THREAD
	1							SURFACE MOUNTED HOUSING BOTTOM ENTRY	ALUMINIUM		GREY	26	NEUTRAL, MILLED (B5)
			1	1			1	SIDE CLIP	STEEL	ZINK PLATED	BLUE	25	PURCHASED PART FA. WALTER
			2	2			2	CROSS RECES PAN HEAD SCREW	STEEL	ZINK PLATED	BLUE	24	M6x8.4
						2		CLIP BOLT	STAINLESS STEEL	BLANC		23	
(B5)	2		2					CLIP BOLT	STEEL	ZINK PLATED	BLUE	22	
		1						CYLINDER SCREW	STAINLESS STEEL	BLANC		21	M5x16
				1	1		1	CYLINDER SCREW	STEEL	ZINK PLATED	BLUE	20	M5x16
		1				1		LEG SPRING	STAINLESS STEEL	BLANC		19	
	1		1	1	1		1	LEG SPRING	STEEL	ZINK PLATED	BLUE	18	
		1				1		RIVET PIN	STAINLESS STEEL	BLANC		17	5x80
	1		1	1	1		1	RIVET PIN	STEEL	ZINK PLATED	BLUE	16	5x80
	2	2			2	2		CROSS RECES PAN HEAD SCREW	STAINLESS STEEL	BLANC		15	M6x8
SUPERSEDED					1			~~SIDE CLIP~~	~~STEEL~~	~~ZINK PLATED~~	~~BLUE~~	~~14~~	~~SONDER~~
		1				1		SIDE CLIP	STAINLESS STEEL	BLANC		13	
SUPERSEDED			1	1			1	~~SIDE CLIP~~	~~STEEL~~	~~ZINK PLATED~~	~~BLUE~~	~~12~~	
		1						COVER	ALUMINIUM		WITHOUT VARNISH	11	
			1					COVER	ALUMINIUM		GREY	10	BOLT OF THE COVER
				1				COVER	ALUMINIUM		GREY	9	NEUTRAL
						1		COVER	ALUMINIUM	ALUMINIUM OXID	BLACK	8	
					1		1	COVER	ALUMINIUM		GREY	7	
	1	1	1	1	1	1	1	FLANGE SEAL	NEOPRENE		BLACK	6	
	1	1	1	1	1	1	1	PROFIL SEAL	NEOPRENE		BLACK	5	
		1						SURFACE MOUNTED HOUSING BOTTOM ENTRY	ALUMINIUM		WITHOUT VARNISH	4	
				1				SURFACE MOUNTED HOUSING BOTTOM ENTRY	ALUMINIUM		GREY	3	NEUTRAL/EJECTOR COUNTERSANK
						1		SURFACE MOUNTED HOUSING BOTTOM ENTRY	ALUMINIUM	ALUMINIUM OXID	BLACK	2	
			1		1		1	SURFACE MOUNTED HOUSING BOTTOM ENTRY	ALUMINIUM		GREY	1	
	HB.48.AGD-LB	HB.48.AGD-LB	HB.48.AGD-LB	HB.48.AGD-LB	HB.48.AGD-LB	HB.48.AGD-LB	HB.48.AGD-LB						

DIMENSIONS: mm

MATERIAL: -

TOLERANCES UNLESS OTHERWISE SPECIFIED:
0 PLC ±-
1 PLC ±-
2 PLC ±-
3 PLC ±-
ANGLES ±0°
FINISH -

DRN R. SCHNEIDER 09MAR2007
CHK J. SCHNURPFEIL 09MAR2007
APVD
PRODUCT SPEC -
APPLICATION SPEC -
WEIGHT -
CUSTOMER DRAWING

Tyco Electronics AMP GmbH
53879 Neuenkirchen (Germany)

NAME SURFACE MOUNTED HOUSING BOTTOM ENTRY
HB.48.AGD-LB

SIZE	CAGE CODE	DRAWING NO	RESTRICTED TO
A1	00779	C-1102389	-

SCALE 5:1 SHEET 1 OF 1 REV B6

AMP 4805 REV 31MAR2000
Pro/ENGINEER DRAWING

Downloaded from Elcodis.com electronic components distributor