THIS DRAWING IS UNPUBLISHED. RELEASED FOR PUBLICATION 2006
© COPYRIGHT 2006 BY TYCO ELECTRONICS CORPORATION. ALL RIGHTS RESERVED.

LOC	DIST
A1	-

REVISIONS

P	LTR	DESCRIPTION	DATE	DRN	APVD
	A2	ECR-09-013545	12MAY2009	SR	AR

NOTES

1 PART SHALL BE FREE AND CLEAN OF BURRS AND OTHER FOREIGN MATERIAL

2 PACKAGING: QUANTITY 3 PIECES

3 VARNISHING INSIDE HOUSING NOT REQUIRED

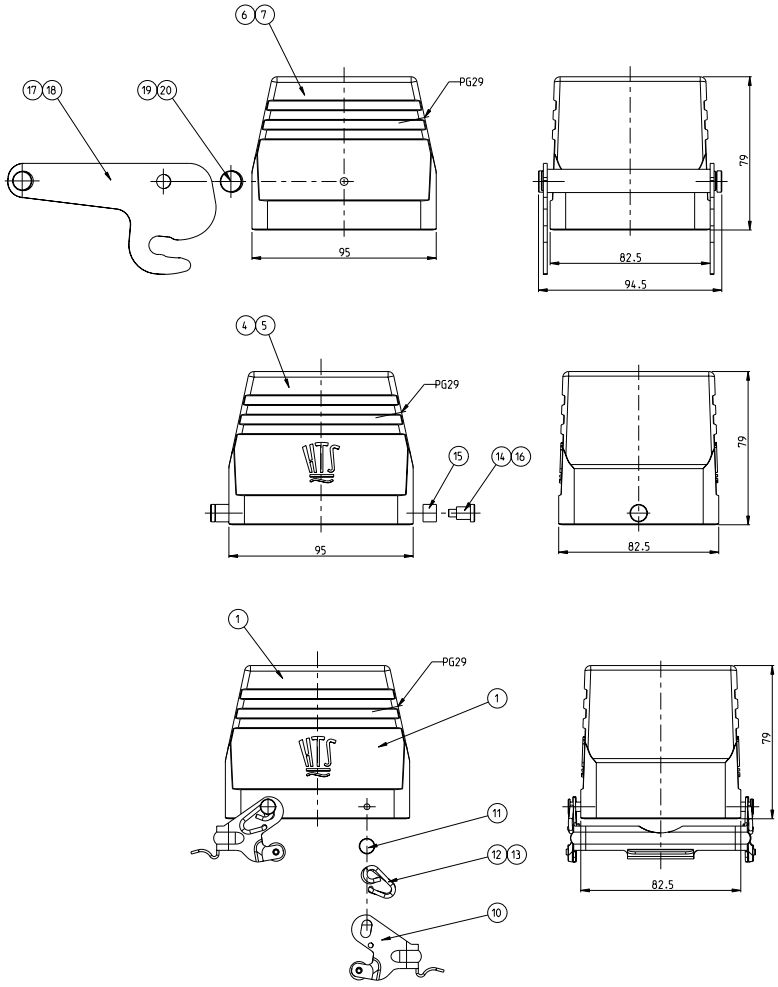

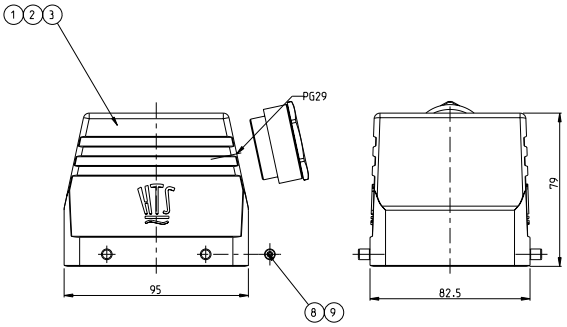

2-3	1-3	2-7	1-7	1-1	0-1	2-6	1-6	DESCRIPTION	MATERIAL	SURFACE	COLORE	ITEM	NOTES
2								CLIP POSITIONER	STAINLESS STEEL	BLANC		20	
	2							CLIP POSITIONER	STEEL	ZINC PLATED	BLUE	19	
1								CENTRAL CLIP	STAINLESS STEEL	BLANC		18	
	1							CENTRAL CLIP	STEEL	ZINC PLATED	BLUE	17	
		2						CLIP BOLT	STAINLESS STEEL	BLANC		16	
			2					SLIDE SPOOL	STEEL	ZINC PLATED	BLUE	15	
			2					CLIP BOLT	STEEL	ZINC PLATED	BLUE	14	
				2				CLIP SPRING RIGHT	STEEL	ZINC PLATED	BLUE	13	
				2				CLIP SPRING LEFT	STEEL	ZINC PLATED	BLUE	12	
				4				CLIP POSITIONER	STEEL	ZINC PLATED	BLUE	11	
				2				LOCKING CLIP	STEEL	ZINC PLATED	BLUE	10	
						4		CLIP BOLT	STAINLESS STEEL	BLANC		9	
					4		4	CLIP BOLT	STEEL	BLUE	BLUE	8	
1								HOOD	ALUMINIUM	ALUMINIUM OXID	BLACK	7	
	1							HOOD	ALUMINIUM		GREY	6	
		1						HOOD	ALUMINIUM	ALUMINIUM OXID	BLACK	5	
			1					HOOD	ALUMINIUM		GREY	4	
					1			HOOD	ALUMINIUM		WITHOUT VARNISH	3	
						1		HOOD	ALUMINIUM	ALUMINIUM OXID	BLACK	2	
				1			1	HOOD	ALUMINIUM		GREY	1	

HB.32.STS.1.29.G
HB-K.32.STS.1.29.G
HB.32.STS.1.29.G
HB.32.STS-VS.1.29.G
HB.32.STS-GR.1.29.G
HB-K.32.STS-GR.1.29.G
HB-Z.32.STS-ZB.1.29.G
HB-K/Z.32.STS-ZB.1.29.G

THIS DRAWING IS A COMPUTER DESIGNED PROJECT AND ANY MANUFACTURING INFORMATION IS IN WHOLE OR IN PART BASED ON THIS LEVEL OF DESIGN.

DIMENSIONS: (MM)

TOLERANCES UNLESS OTHERWISE SPECIFIED:
0 PLC ±-
1 PLC ±-
2 PLC ±-
3 PLC ±-
4 PLC ±-
ANGLES ±1°

MATERIAL -
FINISH -

DRN R.SCHNEIDER 12MAY2009
CHK T.SCHNURPFEIL 12MAY2009
APVD -
PRODUCT SPEC -
APPLICATION SPEC -
WEIGHT -

Tyco Electronics AMP GmbH
53757 Sankt Augustin (Germany)

NAME HOOD HB.32.STS.1.29.G -

SIZE A1 | CAGE CODE 00779 | DRAWING NO C-1102348 | RESTRICTED TO -

CUSTOMER DRAWING | SCALE 1:1 | SHEET 1 OF 1 | REV A2

AMP 0005 REV 31MAR2000
Pro/ENGINEER DRAWING

Downloaded from Elcodis.com electronic components distributor