THIS DRAWING IS UNPUBLISHED. RELEASED FOR PUBLICATION .MMM
© COPYRIGHT MMY BY TYCO ELECTRONICS CORPORATION. ALL RIGHTS RESERVED.

LOC	DIST
A1	-

REVISIONS

P	LTR	DESCRIPTION	DATE	DRN	APVD
	A2	Released as per ECR-08-017219	09.July.2008	SP	TS

PN 1-1 & 2-1

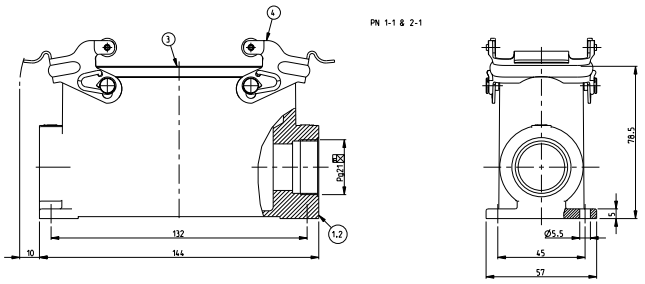

PN 1-2

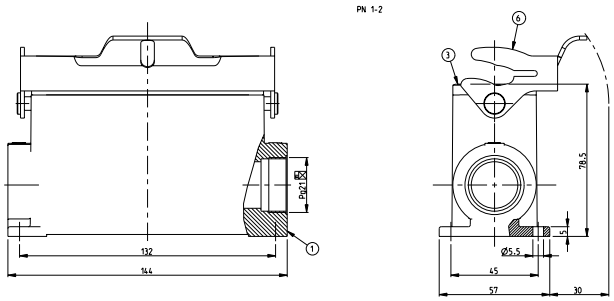

PN 1-8

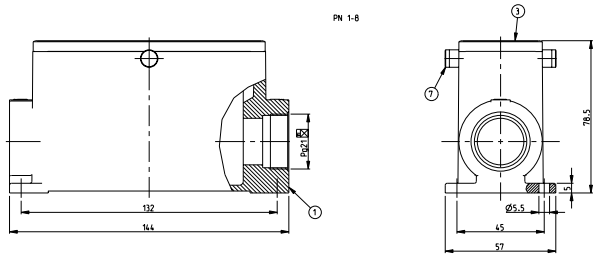

NOTES.

1 Material:Housing:Aluminium Diecasting Alloy
Seals:Neoprene

2 Surface:Varnish grey
-Aluminium Oxide +Varnish Black

3 Varnish on the inside not necessary

4 Packaging
Quantity 5 Pieces in a box

PN 1-1 & 2-1

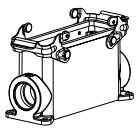

SCALE 1:2

PN 1-2

SCALE 1:2

PN 1-8

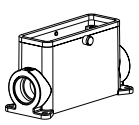

SCALE 1:2

1-8	1-2	2-1	1-1	DESCRIPTION	MATERIAL	SURFACE	COLOR	ITEM NO	REMARKS
2				ZB-Clip bolt	Steel	Zinc plated	Blue	7	
	1			LB-Side clip	Steel	Zinc plated	Blue	6	
		2		VS-Side clip	Stainless steel			5	
			2	VS-Side clip	Steel	Zinc plated	Blue	4	
1	1	1	1	Profile seal	Neoprene		Black	3	
		1		Surface mounted housing side entry HD-K	Aluminium	Aluminium oxide	Black	2	
1	1		1	Surface mounted housing side entry HD	Aluminium		Grey	1	

ORDERING TEXT
HD.64.SG-VS.1.21.Z
HD-K.64.SG-VS.1.21.Z
HD.64.SG-LB.1.21.Z
HD-Z.64.SG-ZVGR.1.21.Z

"I.T. DRAWING IS A GENERAL USE REPRESENTATION OF PRODUCTS MANUFACTURED TO VARIOUS SPECIFICATIONS AND MAY NOT REPRESENT THE LATEST REVISION"

DRN 30.09.03 M.Schweiger
CHK 30.09.03 M.Schweiger
APVD
NAME

Tyco Electronics AMP GmbH
D-58119 Neuenkirchen Germany

DIMENSIONS: mm

TOLERANCES UNLESS OTHERWISE SPECIFIED:
0 PLC ±
1 PLC ±
2 PLC ±
3 PLC ±
ANGLES ±
MATERIAL
FINISH

PRODUCT SPEC 108-74003
APPLICATION SPEC 114-74001
WEIGHT

Surface mounted housing side entry
HD.64.SG.1.21.Z

SIZE A1 | CAGE CODE 00779 | DRAWING NO C-1103346 | RESTRICTED TO -

CUSTOMER DRAWING

SCALE 1:1 | SHEET 1 OF 1 | REV A2

AMP 4805 REV 31MAR2000

PROENGINEER DRAWING

Downloaded from Elcodis.com electronic components distributor