THIS DRAWING IS UNPUBLISHED. RELEASED FOR PUBLICATION
COPYRIGHT BY TYCO ELECTRONICS CORPORATION. ALL RIGHTS RESERVED.

LOC	DIST
A I	–

REVISIONS

P	LTR	DESCRIPTION	DATE	DWN	APVD
	C6	Released as per ECR-07-030424	17.12.07	SP	TS
	C7	**REVISED PER ECO-09-027197**	**19JAN10**	**KK**	**HMR**

PN 1-6

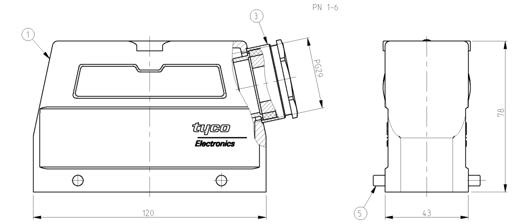

PN 1-3 & 3-0

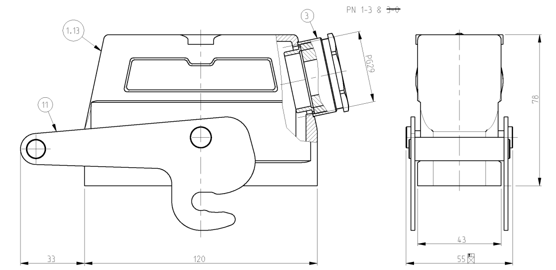

NOTES.

1 Material:Housing:Aluminium Diecasting Alloy

2 Surface:Varnish grey:black

3 Varnish on the inside not necessary

4 Packaging
Quantity 5 Pieces in a box

⚠5 **OBSOLETE PARTS: OBSOLETE CIS STREAMLINING PER D.RENAUD/D.SINISI**

PN 1-1

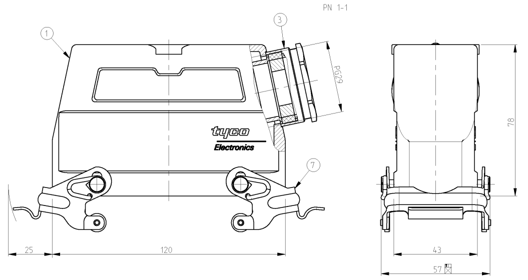

PN 2-3

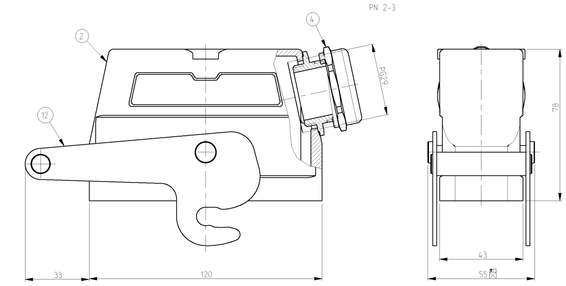

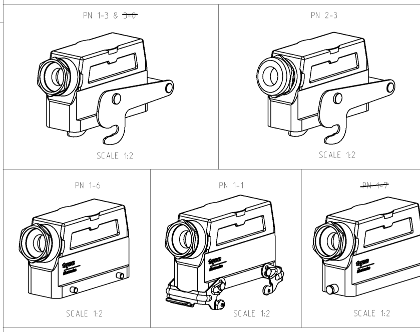

PN 1-7

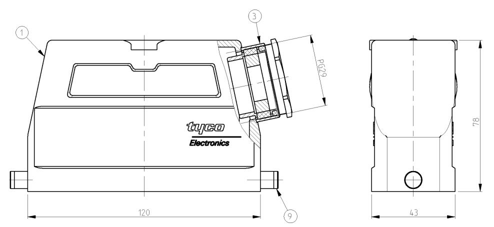

3-0 (⚠5 OBSOLETE)	2-3	1-3	2-7 (OBSOLETE)	1-7 (⚠5 OBSOLETE)	2-1 (OBSOLETE)	1-1	2-6 (OBSOLETE)	1-6	DESCRIPTION	MATERIAL	SURFACE	COLOR	ITEM NO	REMARKS
1									HD Hood	Aluminium	Lemon yellow RAL10127 yellow RaL1012		13	
	1								ZB-Central clip	Stainless steel			12	
1		1							ZB-Central clip	Steel	Zinc plated	Blue	11	
			2						LB-Clip bolt	Stainless steel			10	
				2					LB-Clip bolt	Steel	Zinc plated	Blue	9	
					2				VS-Side clip	Stainless steel			8	
						2			VS-Side clip	Steel	Zinc plated	Blue	7	
							4		VS-Clip bolt	Stainless steel			6	
								4	VS-Clip bolt	Steel	Zinc plated	Blue	5	
	1		1		1		1		Gland fitting Pg29	Brass	Nickel plated		4	
1		1		1		1		1	Cable connection round Pg29	Brass	Nickel plated		3	
	1		1		1		1		HD Hood	Aluminium	Aluminium oxide	Black	2	
		1		1		1		1	HD Hood	Aluminium		Grey	1	

ORDERING TEXT
- 1-6: HD.64.STS.1.29
- 2-6: HD-K.64.Sts.1.29
- 1-1: HD.64.Sts-VS.1.29
- 2-1: HD-K.64.Sts-VS.1.29
- 1-7: HD.64.Sts-GR.1.29
- 2-7: HD-K.64.Sts-GR.1.29
- 1-3: HD-Z.64.Sts-ZB.1.29
- 2-3: HD-K/Z.64.Sts-ZB.1.29
- 3-0: HD-Z.64.Sts-ZB.1.29-50

THIS DRAWING IS A CONTROLLED DOCUMENT FOR TYCO ELECTRONICS CORPORATION IT IS SUBJECT TO CHANGE AND THE CONTROLLING ENGINEERING ORGANIZATION SHOULD BE CONTACTED FOR THE LATEST REVISION.

DWN	Schneider 17.07.1997
CHK	Schnurpfeil 17.07.1997
APVD	–
PRODUCT SPEC	108-74001 108-74003
APPLICATION SPEC	114-74001 114-74004
WEIGHT	

DIMENSIONS: mm

TOLERANCES UNLESS OTHERWISE SPECIFIED: n.ISO 8015; n.ISO 2768-mH-E; n.DIN 16901-120
0 PLC ±
1 PLC ±
2 PLC ±
3 PLC ±
4 PLC ±
ANGLES ±

MATERIAL

FINISH

Tyco Electronics
Tyco Electronics.AMP.GmbH
D-53819,Neunkirchen,Germany

NAME: Hood HD.64

SIZE	CAGE CODE	DRAWING NO	RESTRICTED TO
A1	00779	C–1102449	–

CUSTOMER DRAWING

SCALE 1:1 SHEET 1 OF 1 REV C7

AMP 4805 REV 31MAR2000

Downloaded from Elcodis.com electronic components distributor