THIS DRAWING IS UNPUBLISHED. RELEASED FOR PUBLICATION MMT
© COPYRIGHT MMT BY TYCO ELECTRONICS CORPORATION. ALL RIGHTS RESERVED.

LOC	DIST
A1	

REVISIONS

P	LTR	DESCRIPTION	DATE	DRN	APVD
	A6	REVISED PER ECO-09-027197	16DEC2009	KK	AEG

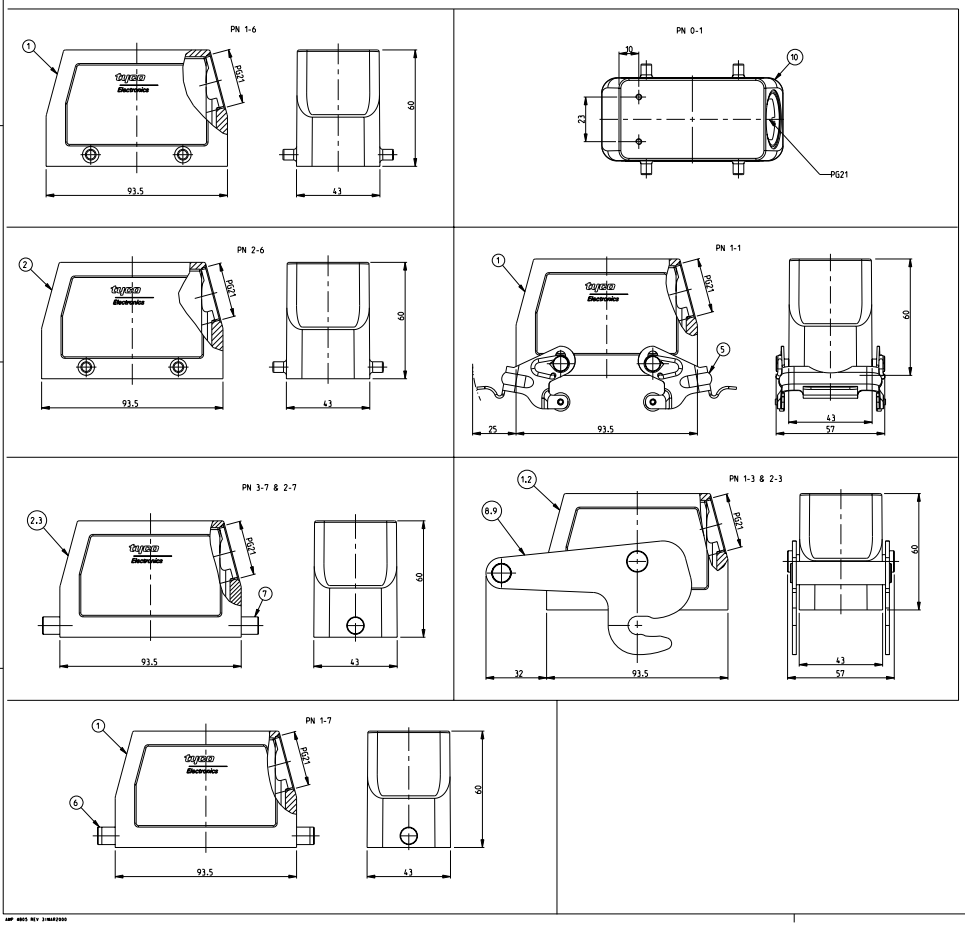

NOTES

1 Material: Housing: aluminium diecasting alloy

2 Surface:- -Powder varnish grey
-Aluminium oxide+
-Varnish black

3 Varnish on the inside not necessary

4 Packaging
Packaging quantity 5 piece in a box

5 OBSOLETE PARTS: OBSOLETE C1S STREAMLINING PER D.RENAUD/D.SINISI

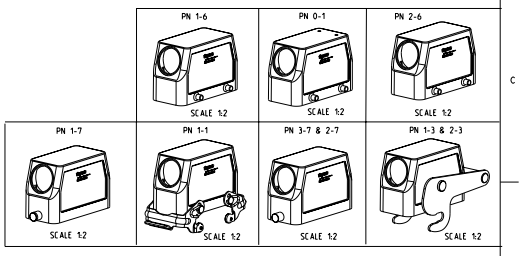

| OBSOLETE | OBSOLETE | | |