THIS DRAWING IS UNPUBLISHED. RELEASED FOR PUBLICATION 20
© COPYRIGHT 20 BY TYCO ELECTRONICS CORPORATION. ALL RIGHTS RESERVED.

LOC	DIST
HM	00

REVISIONS

P	LTR	DESCRIPTION	DATE	DWN	APVD
	A	RLSD; NSD07-030	18APR2007	GG	GB

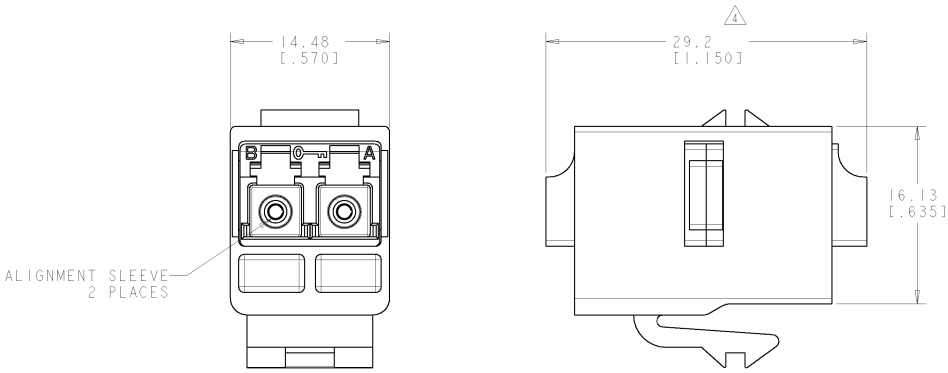

1. MATERIAL:

HOUSING - POLYPHENYLENE OXIDE, 94V-0 RATED. SEE TABLE FOR COLOR.

ADAPTER ASSEMBLY -
HOUSINGS - THERMOPLASTIC, PPE-PS*
ALIGNMENT SLEEVES - CERAMIC
DUST PLUGS: THERMOPLASTIC ELASTOMERS*

*UL 94V-0 RATED AT QUALIFYING THICKNESS

2. THESE TWO SUGGESTED CUTOUT OPENINGS ARE USED IN TANDEM WITH DUAL FRONT AND BACK CUTOUTS.

3. PACKAGED ONE ASSEMBLY PER POLYBAG.

4. DIMENSION APPLIES WITH DUST PLUGS REMOVED.

5. DUST PLUGS SHOWN NOT ASSEMBLED BUT SHIPPED ASSEMBLED TO DUPLEX LC ADAPTER.

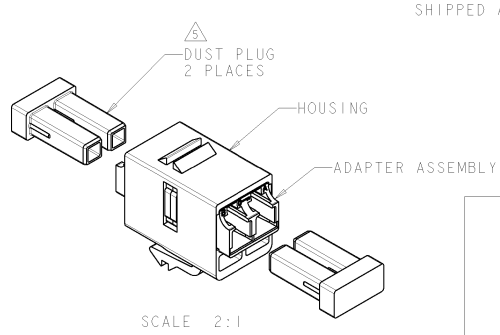

PACKAGE	HOUSING COLOR	PART NUMBER
3	SLATE	1-1933285-0
	ORANGE	1933285-9
	VIOLET	1933285-8
	BROWN	1933285-7
	AQUA	1933285-6
	ROSE	1933285-5
	BLUE	1933285-4
	GREEN	1933285-3
	YELLOW	1933285-2
	RED	1933285-1

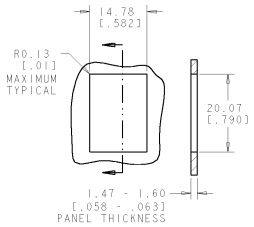

SINGLE PANEL CUTOUT

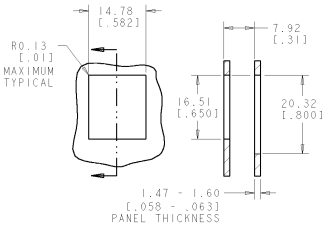

SUGGESTED FLUSH MOUNT PANEL APPLICATION CUTOUT 2

THIS DRAWING IS A CONTROLLED DOCUMENT FOR TYCO ELECTRONICS CORPORATION IT IS SUBJECT TO CHANGE AND THE CONTROLLING ENGINEERING ORGANIZATION SHOULD BE CONTACTED FOR THE LATEST REVISION.

DIMENSIONS: MM[INCHES]

TOLERANCES UNLESS OTHERWISE SPECIFIED:
0 PLC ±-
1 PLC ±-
2 PLC ±-
3 PLC ±-
4 PLC ±-
ANGLES ±-

MATERIAL 1 -

FINISH -

DWN	G GARRETT	18APR2007
CHK	G BOWMAN	18APR2007
APVD	G BOWMAN	18APR2007
PRODUCT SPEC	-	
APPLICATION SPEC	-	
WEIGHT	-	

tyco Electronics
Tyco Electronics
Harrisburg, PA 17105-3608

NAME: ADAPTER, DUPLEX, LC, HYBRID, SL

SIZE	CAGE CODE	DRAWING NO	RESTRICTED TO
A2	00779	C-1933285	-

CUSTOMER DRAWING

SCALE 4:1 SHEET 1 OF 1 REV A

AMP 1471-9 REV 31MAR2000

Pro/ENGINEER DRAWING

Downloaded from Elcodis.com electronic components distributor