THIS DRAWING IS UNPUBLISHED. RELEASED FOR PUBLICATION -,- .
© COPYRIGHT - BY TYCO ELECTRONICS CORPORATION, ALL RIGHTS RESERVED.

LOC	DIST
H	–

REVISIONS

P	LTR	DESCRIPTION	DATE	DWN	APVD
	P	ECR-07-010602	10MAY07	RPE	AH
	P1	REVISED PER ECO-09-021826	31AUG09	KK	AEG
	P2	ECR-10-010419	28JUN10	RK	SRE

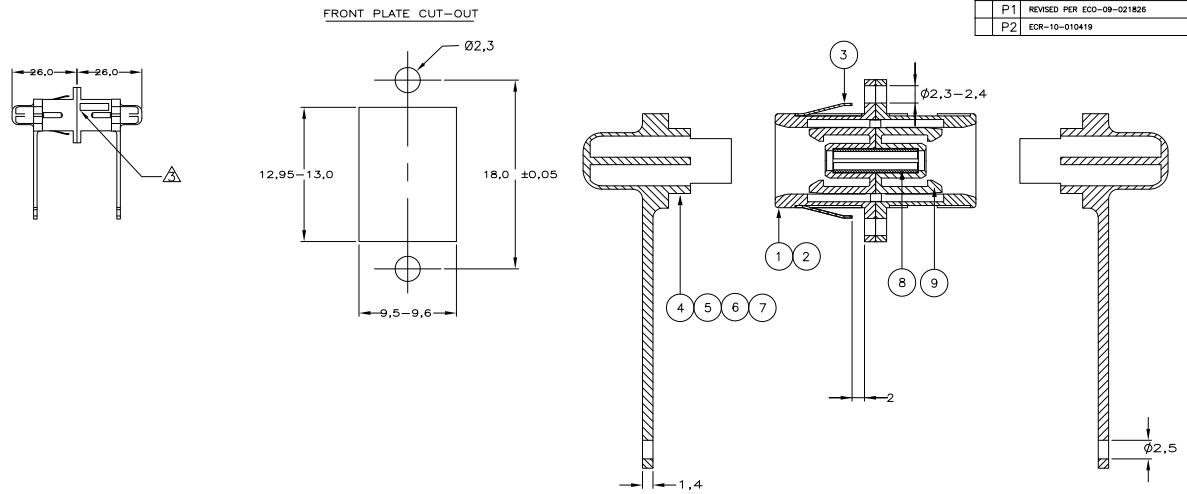

NOTES:

1 MATERIAL:
RECEPTACLE HOUSING: THERMOPLASTIC.
CONNECTOR RETAINER: THERMOPLASTIC, BLACK.
SPLIT SLEEVE: ZrO2.
DUST COVER: THERMOPLASTIC ELASTOMER.

2 RESTRICTED PARTNUMBER

3 P.N. 2-106901-7 PRINTED WITH FACTORY ORDER NUMBER

4 BULK PACKED:
BAG 1: 100 COUPLING BUSHINGS
BAG 2: 200 DUST COVERS
5 TIMES EACH PACKED IN A BOX

5 OBSOLETE PARTS: OBSOLETE CIS STREAMLINING PER D.RENAUD/D.SINISI

2-106901-8	2-106901-7	2-106901-6	2-106901-3	2-106901-1	2-106901-2	4-106901-4	2-106901-0	1-106901-9	1-106901-8	1-106901-7	1-106901-6	1-106901-5	1-106901-4	1-106901-3	1-106901-2	1-106901-1	1-106901-0	0-106901-9	0-106901-8	0-106901-7	0-106901-6	0-106901-5	0-106901-4	0-106901-3	0-106901-2	0-106901-1	DESCRIPTION	ITEM No.
				5 OBSOLETE	5 OBSOLETE		5 OBSOLETE	5 OBSOLETE	5 OBSOLETE	5 OBSOLETE	5 OBSOLETE	5 OBSOLETE		5 OBSOLETE				5 OBSOLETE	5 OBSOLETE	5 OBSOLETE				5 OBSOLETE	5 OBSOLETE	5 OBSOLETE	5 OBSOLETE		
2	2	2	2	2	2	2	2	2	2	2	2	2	2	2	2	2	2	2	2	2	2	2	2	2	2	2	2	CONNECTOR RETAINER	9
1	1	1	1	1	1	1	1	1	1	1	1	1	1	1	1	1	1	1	1	1	1	1	1	1	1	1	1	SPLIT SLEEVE	8
–	2	–	–	–	2	–	1	1	–	–	–	–	–	–	2	2	–	–	–	–	–	–	–	–	–	–	–	DUST COVER, NO STRAP, BLUE	7
–	–	–	–	–	–	–	–	–	1	1	–	–	–	–	–	–	2	2	–	–	–	–	–	–	–	–	–	DUST COVER, STRAP TYPE, BLUE	6
2	–	2	2	–	–	–	–	–	–	–	1	1	–	–	–	–	–	–	–	–	2	2	–	–	–	–	–	DUST COVER, NO STRAP, GREEN	5
–	–	–	–	2	–	2	–	–	–	–	–	–	1	1	–	–	–	–	–	–	–	–	2	2	–	–	–	DUST COVER, STRAP TYPE, GREEN	4
1	1	1	1	1	1	1	1	–	1	–	1	–	1	–	1	–	1	–	1	–	1	–	1	–	1	–	1	RETENTION CLIP	3
–	2	–	–	–	2	–	2	2	2	2	–	–	–	–	2	2	2	2	2	2	–	–	–	–	–	–	–	RECEPTACLE HOUSING, BLUE	2
2	–	2	2	2	–	2	–	–	–	–	2	2	2	2	–	–	–	–	–	–	2	2	2	2	2	2	2	RECEPTACLE HOUSING, GREEN	1
QTY	QTY	QTY	QTY	QTY	QTY	QTY	QTY	QTY	QTY	QTY	QTY	QTY	QTY	QTY	QTY	QTY	QTY	QTY	QTY	QTY	QTY	QTY	QTY	QTY	QTY	QTY	QTY		

THIS DRAWING IS A CONTROLLED DOCUMENT.

DIMENSIONS: mm

TOLERANCES UNLESS OTHERWISE SPECIFIED:
0 PLC ± –
1 PLC ± –
2 PLC ± –
3 PLC ± –
4 PLC ± –
ANGLES ± –

MATERIAL –
FINISH –

DWN	A Middeldorp	13AUG95
CHK	A Hengelmolen	01JUN04
APVD	A Hengelmolen	01JUN04
PRODUCT SPEC	–	
APPLICATION SPEC	–	
WEIGHT	–	

Tyco Electronics
Tyco Electronics Corporation
's-Hertogenbosch, Nederland

NAME: SC COUPLING RECEPTACLE-CERAMIC ALIGNMENT SLEEVE

SIZE	CAGE CODE	DRAWING NO	RESTRICTED TO
A2	00779	C-106901	–

CUSTOMER DRAWING | SCALE 1:1 | SHEET 1 OF 1 | REV P2

AMP 1471-9 REV 31MAR2000

106901

Downloaded from Elcodis.com electronic components distributor