THIS DRAWING IS UNPUBLISHED. RELEASED FOR PUBLICATION
© COPYRIGHT BY TYCO ELECTRONICS CORPORATION. ALL INTERNATIONAL RIGHTS RESERVED.

LOC	DIST
HG	-

REVISIONS

P	LTR	DESCRIPTION	DATE	DWN	APVD
	D	REV PER 0A00-0618-02	6-12-02	DDE	MG
	E	REVISE PER ECR-05-006717	20JUL2005	BB	SB
	F	ECR-07-002388	23FEB2007	DHR	DHR
	F1	REV PER ECR-10-016231	09AUG2010	IL	CT

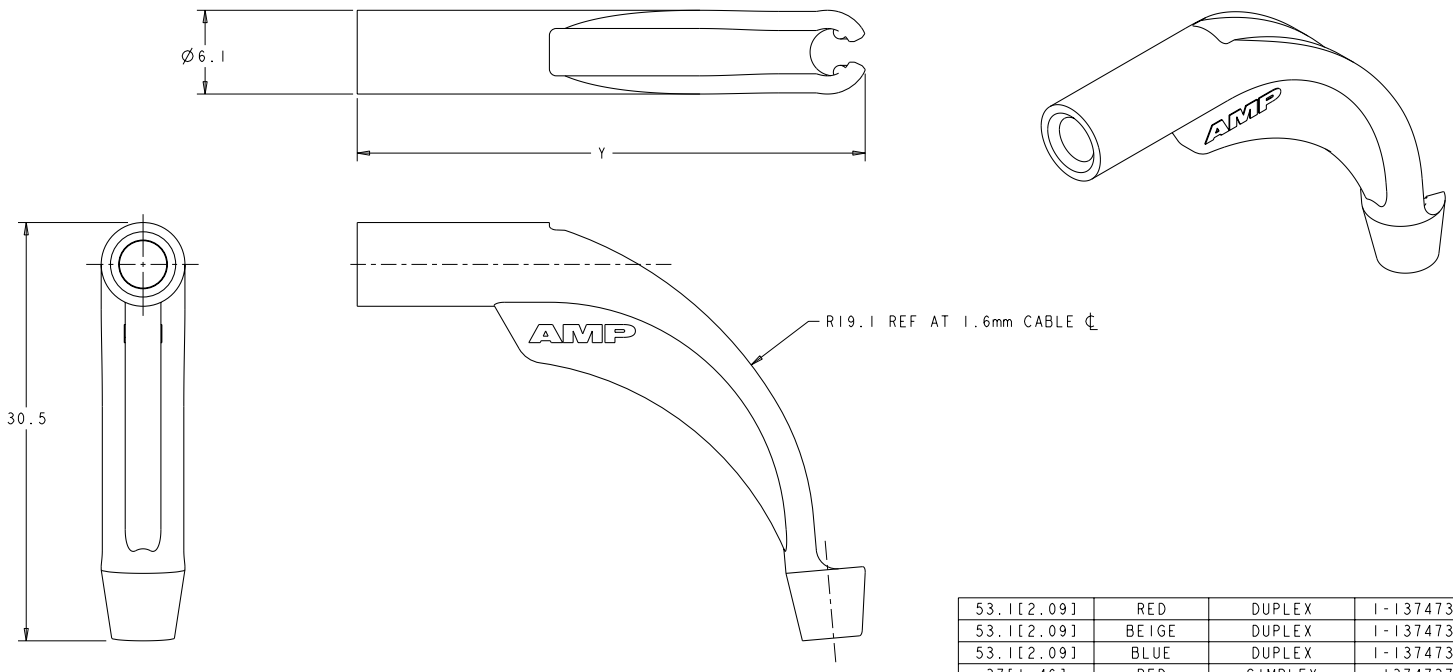

DIM Y	COLOR	DESCRIPTION	PART NO
53.1[2.09]	RED	DUPLEX	1-1374737-6
53.1[2.09]	BEIGE	DUPLEX	1-1374737-4
53.1[2.09]	BLUE	DUPLEX	1-1374737-3
37[1.46]	RED	SIMPLEX	1374737-4
37[1.46]	BLACK	SIMPLEX	1374737-3
37[1.46]	BEIGE	SIMPLEX	1374737-2
37[1.46]	BLUE	SIMPLEX	1374737-1

1. MATERIAL: TPE, UL 94 V-0 RATED AT QUALIFYING THICKNESS, SEE TABLE FOR COLORS.
2. BULK PACKAGED.

THIS DRAWING IS A CONTROLLED DOCUMENT FOR TYCO ELECTRONICS CORPORATION. IT IS SUBJECT TO CHANGE AND THE CONTROLLING ENGINEERING ORGANIZATION SHOULD BE CONTACTED FOR THE LATEST REVISION.

DIMENSIONS: mm

TOLERANCES UNLESS OTHERWISE SPECIFIED:
0 PLC ±0.1
1 PLC ±0.1
2 PLC ±-
3 PLC ±-
4 PLC ±-
ANGLES ±-

MATERIAL - 1

FINISH -

DWN D ERDMAN 9-05-00
CHK M GURRERI 9-05-00
APVD S BUCHTER 9-05-00
PRODUCT SPEC -
APPLICATION SPEC -
WEIGHT -

Tyco Electronics
Tyco Electronics Corporation
Shanghai,China

NAME -
BOOT, OPEN ANGLED, 1.6-2.0mm REAR BODY

SIZE A2 | CAGE CODE | DRAWING NO C- 1374737 | RESTRICTED TO

CUSTOMER DRAWING | SCALE 5:1 | SHEET 1 OF 1 | REV F1

1471-9 (2/09)

Pro/ENGINEER DRAWING

Downloaded from Elcodis.com electronic components distributor