THIS DRAWING IS UNPUBLISHED. RELEASED FOR PUBLICATION ,19 .
© COPYRIGHT 19 BY AMP INCORPORATED. ALL RIGHTS RESERVED.

LOC	DIST
CE	16

REVISIONS

P	LTR	DESCRIPTION	DATE	DWN	APVD
	B	REVISE PER 0A00-0506-99	11MAY99	JPM	SB

1. MATERIAL:
   - CONNECTOR HOUSING: THERMOPLASTIC
   - PLUG HOUSING: THERMOPLASTIC
   - INTERNAL BODY: THERMOPLASTIC
   - SPRING: STAINLESS STEEL
   - FERRULE BASE: THERMOPLASTIC
   - FERRULE: CERAMIC
   - STRAIN RELIEF: THERMOPLASTIC ELASTOMER
   - DUST CAP: THERMOPLASTIC
2. BULK PACKAGE, 500 PIECES.
3. FOR USE WITH 900µm BUFFERED FIBER.
4. BUFFER BOOT NOT INCLUDED.

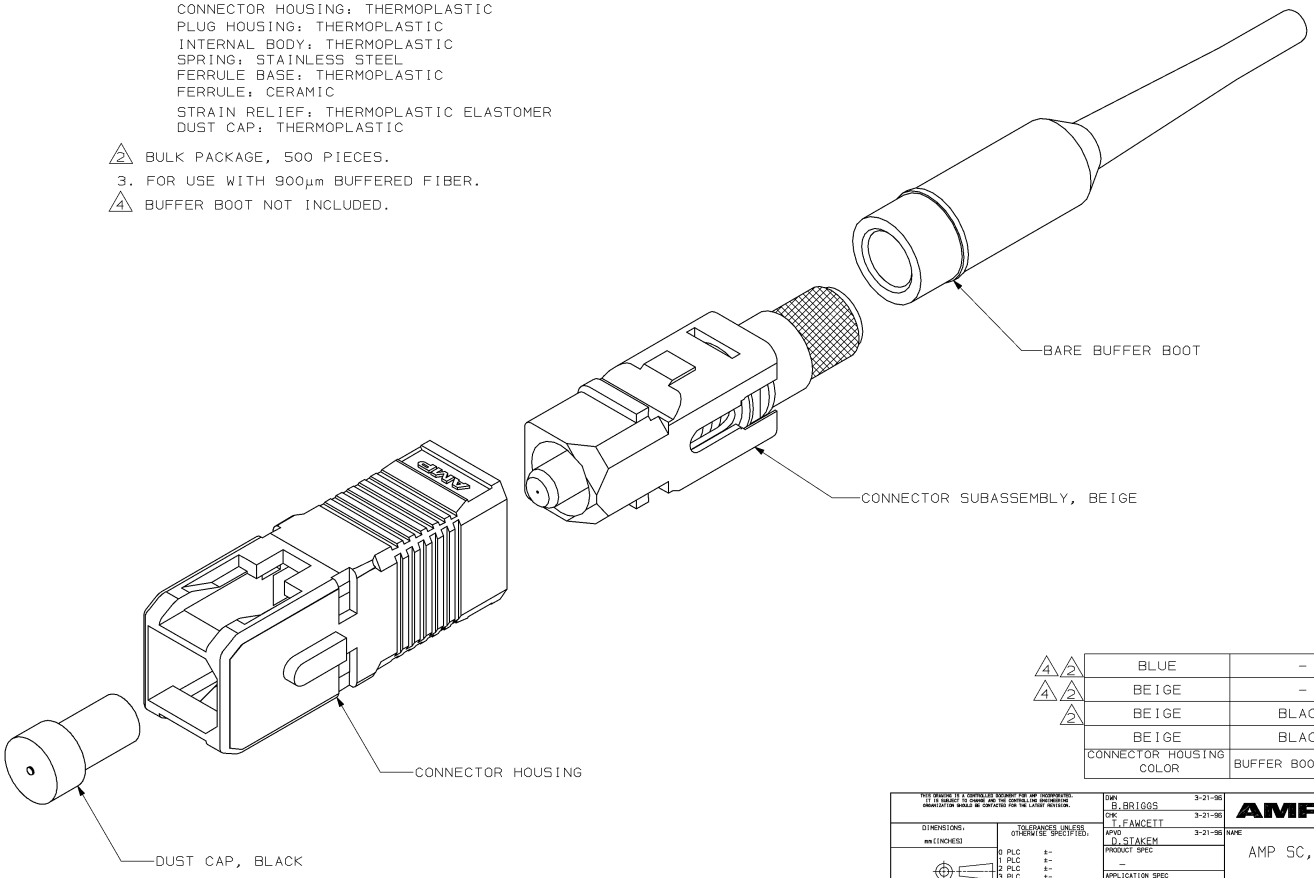

CONNECTOR HOUSING COLOR	BUFFER BOOT COLOR	PART NUMBER
BLUE	–	504932-4
BEIGE	–	504932-3
BEIGE	BLACK	504932-2
BEIGE	BLACK	504932-1

THIS DRAWING IS A CONTROLLED DOCUMENT FOR AMP INCORPORATED. IT IS SUBJECT TO CHANGE AND THE CONTROLLING ENGINEERING ORGANIZATION SHOULD BE CONTACTED FOR THE LATEST REVISION.

DIMENSIONS: mm [INCHES]

TOLERANCES UNLESS OTHERWISE SPECIFIED:
0 PLC ±–
1 PLC ±–
2 PLC ±–
3 PLC ±–
4 PLC ±–
ANGLES ±–

MATERIAL 1
FINISH –

DWN B.BRIGGS 3-21-96
CHK T.FAWCETT 3-21-96
APVD D.STAKEM 3-21-96
PRODUCT SPEC –
APPLICATION SPEC –
WEIGHT –
CUSTOMER DRAWING

AMP Incorporated
Harrisburg, PA 17105-3608

NAME: AMP SC, MULTIMODE CONNECTOR KIT, 900µm

SIZE	CAGE CODE	DRAWING NO
A2	00779	C-504932

SCALE	SHEET	REV
NTS	1 OF 1	B

504932

AMP 1471-9 REV 05MAY94

11-MAY-99 09:22:42 amp40972 /home/amp40972/edmmod

Downloaded from Elcodis.com electronic components distributor