THIS DRAWING IS UNPUBLISHED. RELEASED FOR PUBLICATION 20
© COPYRIGHT 20 BY TYCO ELECTRONICS CORPORATION. ALL RIGHTS RESERVED.

LOC	DIST
CE	00

REVISIONS

P	LTR	DESCRIPTION	DATE	DWN	APVD
	1	NEW PRODUCT RELEASE	28JUN2005	BB	LS
	A	RELEASED PER ECR-07-004102	16MAR2007	JWD	LS

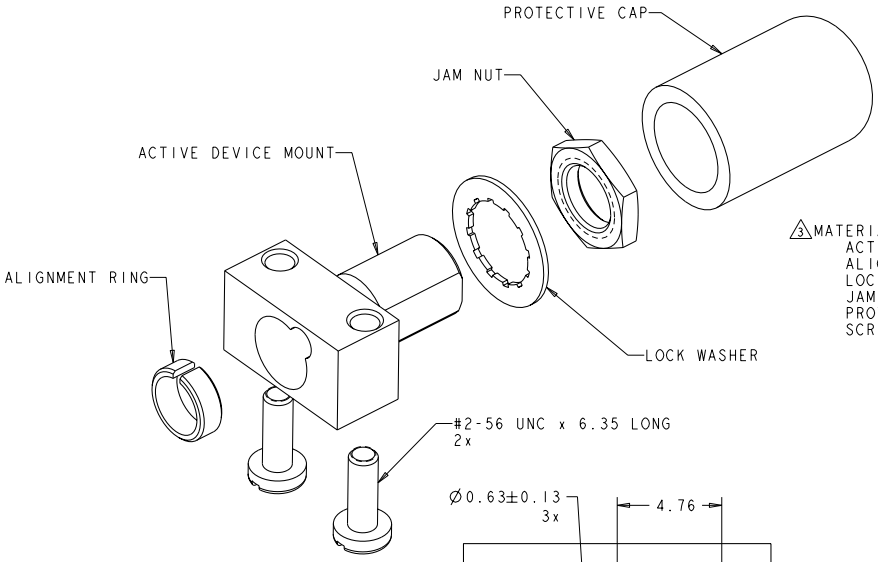

1. ACCEPTS ACTIVE DEVICES: TO-18 TYPE, TO-46 TYPE, TO-52 TYPE, AND HONEYWELL LOW COST PLASTIC SWEETSPOT.

2 BULK PACKAGE.

3 MATERIAL:
ACTIVE DEVICE MOUNT: ZINC
ALIGNMENT RING: TPE, UL94 V-0 RATED AT QUALIFYING THICKNESS.
LOCK WASHER: STAINLESS STEEL
JAM NUT: NICKEL PLATED BRASS
PROTECTIVE CAP: VINYL, COLOR: RED
SCREWS: STAINLESS STEEL

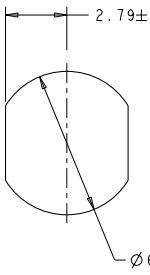

SUGGESTED CLEARANCE HOLE

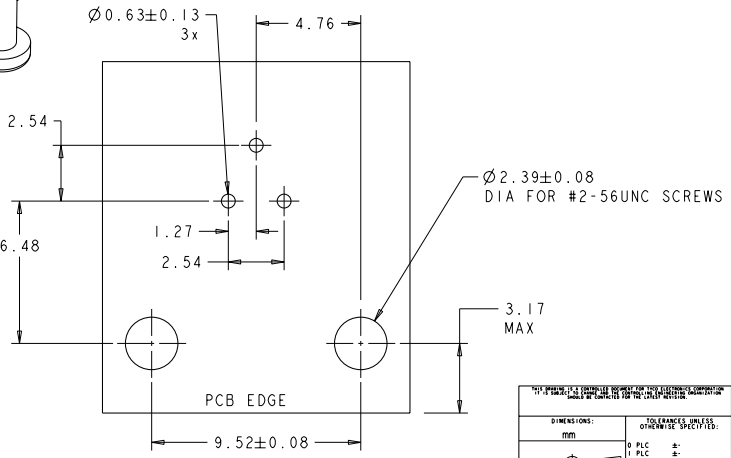

SUGGESTED MOUNTING PATTERN
MAX PANEL THICKNESS 1.57

2	
	5502136-2
	5502136-1
	PART NUMBER

THIS DRAWING IS A CONFIDENTIAL DOCUMENT FOR TYCO ELECTRONICS CORPORATION. IT IS SUBJECT TO COPYRIGHT AND THE CONTENTS OR INFORMATION HAVE SHOULD NOT CONTRACTED FOR THE LATEST REVISION.

DIMENSIONS: mm

TOLERANCES UNLESS OTHERWISE SPECIFIED:
0 PLC ±-
1 PLC ±-
2 PLC ±0.25
3 PLC ±-
4 PLC ±-
ANGLES ±-

MATERIAL 3 -
FINISH -

DWN B.BRIGGS 28JUN2005
CHK L.SAUERWEIN 28JUN2005
APVD S.BUCHTER 28JUN2005
PRODUCT SPEC -
APPLICATION SPEC -
WEIGHT -
CUSTOMER DRAWING

Tyco Electronics
Harrisburg, PA 17105-3608

NAME ACTIVE DEVICE MOUNT KIT, PCB MOUNT, FSMA, OPTIMATE
-

SIZE	CAGE CODE	DRAWING NO	RESTRICTED TO
A2	00779	C-5502136	-

SCALE 5:1 SHEET 1 OF 1 REV A

AMP 14T1-9 REV 31MAR2000
Pro/ENGINEER DRAWING

Downloaded from Elcodis.com electronic components distributor