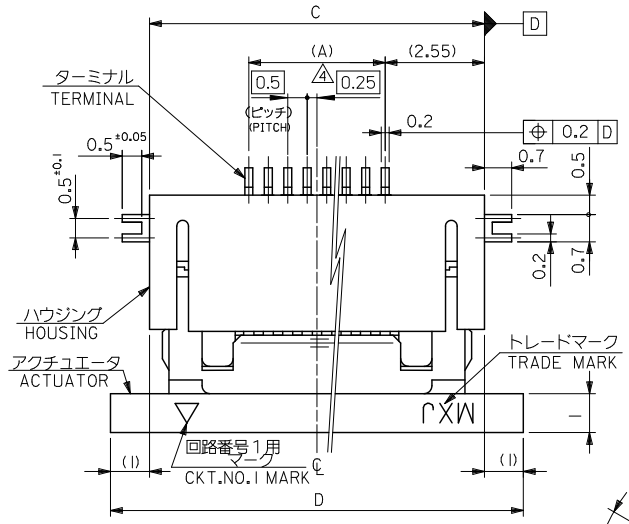

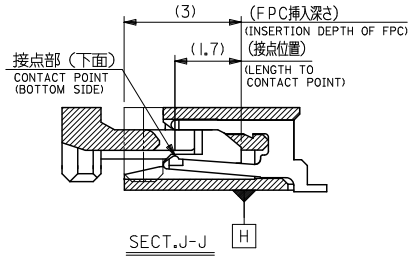

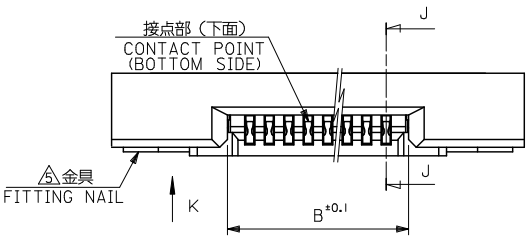

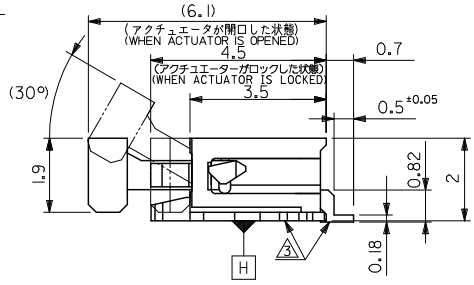

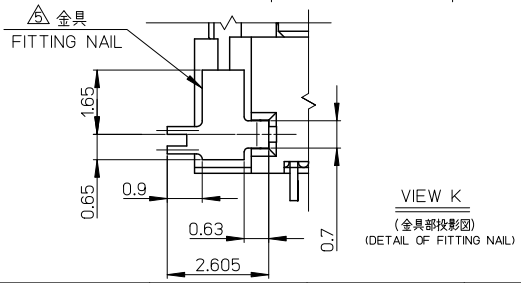

21.6	19.6	15.65	14.5	52437-3072	30
21.1	19.1	15.15	14.0	52437-2972	29
20.6	18.6	14.65	13.5	52437-2872	28
20.1	18.1	14.15	13.0	52437-2772	27
19.6	17.6	13.65	12.5	52437-2672	26
19.1	17.1	13.15	12.0	52437-2572	25
18.6	16.6	12.65	11.5	52437-2472	24
18.1	16.1	12.15	11.0	52437-2372	23
17.6	15.6	11.65	10.5	52437-2272	22
17.1	15.1	11.15	10.0	52437-2172	21
16.6	14.6	10.65	9.5	52437-2072	20
D	C	B	(A)	EMBOSSED PACKAGE / ORDER No. オーダー番号	極数 CKT.

CONNECTOR SERIES NO. : 52437-**26

REVISED
EC NO: J2011-0806 2010/05/12
DRWN:HYOSHINO 2010/06/10
CHKD:ASHIMOYAMA 2010/12/17
APPR:KMORIKAWA
DESCRIPTION
REV D

GENERAL TOLERANCES (UNLESS SPECIFIED)

10 UNDER	±0.2
10 OVER 30 UNDER	±0.25
30 OVER	±0.3
ANGULAR	±3 °

DRAFT WHERE APPLICABLE MUST REMAIN WITHIN DIMENSIONS

DIMENSION STYLE: MM ONLY	SCALE: ---	DESIGN UNITS: METRIC	THIRD ANGLE PROJECTION
DRAWN BY: YSAKIYAM	DATE: '04/01/08	TITLE: 0.5 FPC CONN. ZIF FOR SMT R/A (BOTTOM CONTACT) TIN-BISMUTH PLATING	
CHECKED BY: MSASAO	DATE: '04/01/08		
APPROVED BY: MSASAO	DATE: '04/01/08	molex MOLEX INCORPORATED	
MATERIAL NO.: SEE TABLE		DOCUMENT NO.: SD-52437-017	SHEET NO.: 1 OF 2
SIZE: A3	THIS DRAWING CONTAINS INFORMATION THAT IS PROPRIETARY TO MOLEX INCORPORATED AND SHOULD NOT BE USED WITHOUT WRITTEN PERMISSION		

tb_frame_A3_J_ME_S
Rev. E 2006/04/15

EN-02JA(021)

Downloaded from Elcodis.com electronic components distributor

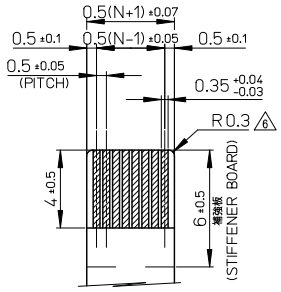

適合錫系めっきFPC推奨寸法
APPLICABLE FPC OF TIN
PLATING RECOMMENDED DIMENSION
仕上がり厚さ：0.3±0.05
THICKNESS: 0.3+0.05/-0.05

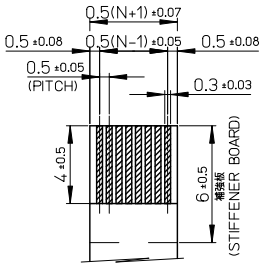

適合錫系めっきFFC推奨寸法
APPLICABLE FFC OF TIN
PLATING RECOMMENDED DIMENSION
仕上がり厚さ：0.3±0.05
THICKNESS: 0.3+0.05/-0.05

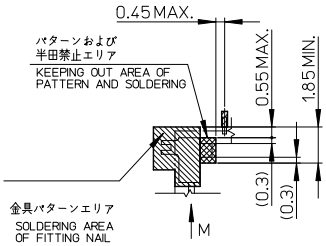

DETAIL L

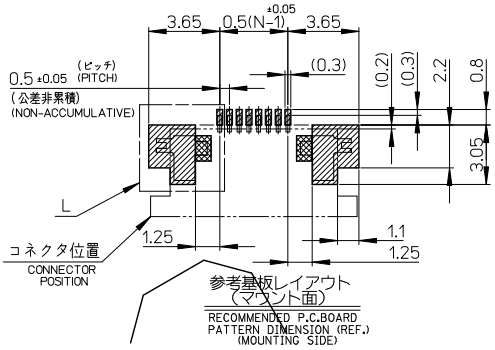

参考基板レイアウト
（マウント面）
RECOMMENDED P.C.BOARD
PATTERN DIMENSION (REF.)
(MOUNTING SIDE)

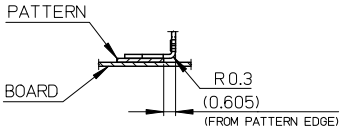

VIEW M
(DETAIL OF FITTING NAIL
ON PATTERN)

注記NOTES

1.使用材料
MATERIAL
ハウジング：46ナイロン、ガラス充填、UL94V-0、白
HOUSING:PA46,GLASS FILLED,UL94V-0,WHITE
アクチュエータ：ポリフェニレンサルフィド（PPS）、ガラス充填、UL94V-0、茶色
ACTUATOR:POLYPHENYLENE SULFIDE,GLASS FILLED,UL94V-0,BROWN
ターミナル：リン青銅、ニッケル下地錫ビスマスめっき（t=0.2）
TERMINAL:PHOSPHOR BRONZE,TIN BISMUTH OVER NICKEL PLATING
金具：リン青銅、ニッケル下地錫めっき（t=0.2）
FITTING NAIL: PHOSPHOR BRONZE,TIN OVER NICKEL PLATING

2.エンボステープ梱包時は、アクチュエータがロックした状態になります。
IN THE PACKAGE,ACTUATOR OF PART
NO.52437-**26 SHOULD BE LOCKED.

3 ソルダーテール半田付け面のズレ量、及び金具半田付け面のズレ量は、
基準面Hに対して上方向に0.1MAXIMUM、下方向0.15MAXIMUMとする。
MISALIGNMENT OF SOLDER TAILS AND FITTING NAILS FROM
DATUM-H.
UPPER DIRECTON:0.1MAXIMUM
LOWER DIRECTION:0.15 MAXIMUM

4 偶数極に適用
APPLY FOR EVEN CIRCUIT.

5 パターン剥離止め金具
FITTING NAIL FOR PREVENTION OF PEELING OF P.W.B. PATTERN.

6 R0.3は、FPCの導体部にかからないこと
R0.3 MUST NOT BE OVERLAPED TO PATTERN OF FPC.

7.ソルダーテールの平坦度は、0.1MAXIMUMとする。
SOLDER TAIL COPLANARITY IS 0.1 MAXIMUM.

8.ELV 及び RoHS 適合品
ELV AND RoHS COMPLIANT

FPCについて：
打抜き方向は導体側から補強板側を推奨致します。
補強フィルム材質はポリイミドを推奨致します。
接着剤は熱硬化接着剤を推奨致します。

ABOUT FPC:
RECOMMENDED PUNCHER DIRECTION :
FROM CONDUCTOR SIDE TO STIFFENER BOARD SIDE.
RECOMMENDED MATERIAL:
STIFFENER FILM : POLYIMIDE
BONDING AGENT : THERMOSETTING BONDING AGENT

REV	DESCRIPTION	
D	REVISED EC NO: J2011-0806 DRWN:HYOSHINO 2010/05/12 CHKD:ASHIMOYAMA 2010/06/10 APPR:KMORIKAWA 2010/12/17	

GENERAL TOLERANCES (UNLESS SPECIFIED)

10 UNDER	±0.2
10 OVER 30 UNDER	±0.25
30 OVER	±0.3
ANGULAR	±3 °

DRAFT WHERE APPLICABLE MUST REMAIN WITHIN DIMENSIONS

DIMENSION STYLE: MM ONLY	SCALE: ---	DESIGN UNITS: METRIC	THIRD ANGLE PROJECTION
DRAWN BY: YSAKIYAM	DATE: '04/01/08	TITLE: 0.5 FPC CONN. ZIF FOR SMT R/A (BOTTOM CONTACT) TIN-BISMUTH PLATING	
CHECKED BY: MSASAO	DATE: '04/01/08		
APPROVED BY: MSASAO	DATE: '04/01/08	molex MOLEX INCORPORATED	
MATERIAL NO.: SEE TABLE		DOCUMENT NO.: SD-52437-017	SHEET NO.: 2 OF 2
SIZE: A3	THIS DRAWING CONTAINS INFORMATION THAT IS PROPRIETARY TO MOLEX INCORPORATED AND SHOULD NOT BE USED WITHOUT WRITTEN PERMISSION		

tb_frame_A3_J_ME_S
Rev. E 2006/04/15

EN-02JA(021)

Downloaded from Elcodis.com electronic components distributor

DWG. NO. SD-52437-018

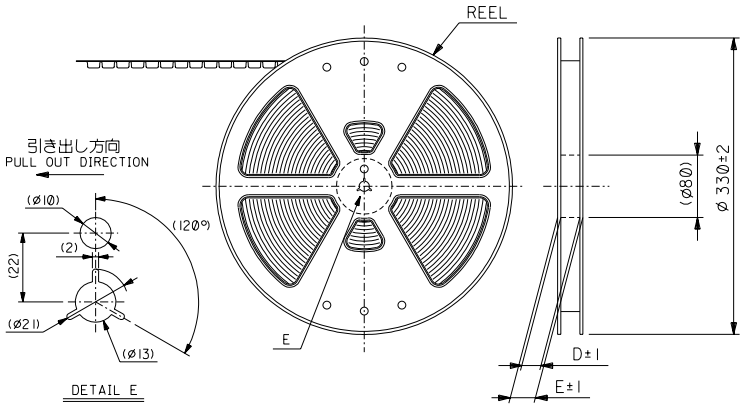

注記 NOTES

1. 製品番号 52437-**26 の梱包状態はアクチュエータがロックした状態とする。
   詳細寸法については図面 SD-52437-017 を参照下さい。
   IN THE PACKAGE,ACTUATOR OF PART NO.52437-**26 SHOULD BE LOCKED
   RE DETAILED DIMENSIONS,SEE SD-52437-017.
2. 梱包数量：1000個／リール
   NUMBER OF CONNECTORS:1000PCS/REEL
3. リードテープ長さ LEAD TAPE LENGTH

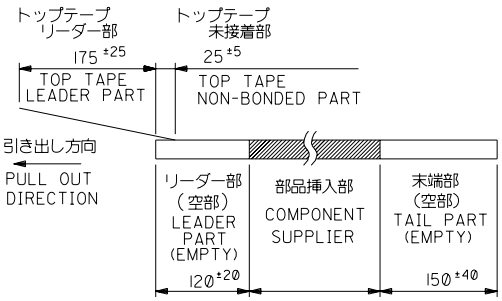

4. トップテープの剥離強度：（剥離方向は下図参照）
   0．1N～1．3N {10gf～130gf}尚、本規格値は、出荷時に適用。
   （但し、輸送時に剥離が発生しない事。）
   PEELING OFF FORCE OF TOP TAPE
   0.1N ～1.3N{10gf ～130gf}(PEELING DIRECTION AS SHOWN IN FOLLOWING FIG.)
   THIS REQUIREMENT SHOULD BE APPLIED AT SHIPMENT
   PEEL OFF SHOULD NOT BE ALLOWED,
   DURING TRANSPORTATION

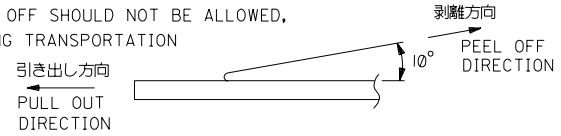

5. 材料 (MATERIAL)
   キャリアテープ (CARRIER TAPE) :ポリプロピレン(POLYPROPYLENE)
   トップテープ (TOPTAPE) : PET, PE, PEF
   リール (REEL): ポリスチレン (PS) <リサイクル材を含む>
   POLYSTYREN (PS) <RECYCLE MATERIAL CONTAINED>
6. 本製品は 52437-**91 の鉛フリー品である。
   THIS PRODUCT IS LEAD FREE OF 52437-**91.

REV	DESCRIPTION	EC NO.	DRWN	CH'K	APPR	DATE
A	REVISED	J2004-2350	N.AIDA	K.TOJO	M.SASAO	'04/02/09
0	RELEASED	J2004-1850	Y.SAKIYAMA	M.SASAO	M.SASAO	'04/01/08

DO NOT SCALE DRAWING

MATERIAL 材料: 注記参照 SEE NOTES
FINISH 仕上げ: //
WIRE RANGE 適用電線範囲: //
INS. RANGE 被覆外径: //

GENERAL TOLERANCES: (UNLESS SPECIFIED) 一般公差
10 UNDER 未満 ±0.2
10 OVER 以上 30 UNDER 未満 ±0.25
30 OVER 以上 ±0.3
ANGLE 角度 ±3°

SCALE: //
DESIGN UNITS: ☒mm ☐INCH
THIRD ANGLE PROJECTION
DIMENSIONS: ☐mm/INCH ☐INCH/mm ☒mm ONLY
SHT | REV
REVISE ON CAD ONLY

DRAWN BY & DATE: Y.SAKIYAMA '04/01/08
CHECKED BY & DATE: M.SASAO '04/01/08
APPROVED BY & DATE: M.SASAO '04/01/08
CAD FILENAME: SD-52437-018.S01

TITLE: 0.5 FPC Conn Assy ZIF SMT RA With Tape Embstp Pkg -LEAD FREE-
MOLEX INCORPORATED
MATERIAL NO. 52437-**72
DRAWING NO. SD-52437-018
SHEET NO. 1 OF 3
SIZE B

THIS DRAWING CONTAINS INFORMATION THAT IS PROPRIETARY TO MOLEX INCORPORATED AND SHOULD NOT BE USED WITHOUT WRITTEN PERMISSION.

SD-52437-018.S01

EN-02J(097) MXJ-54

Downloaded from Elcodis.com electronic components distributor

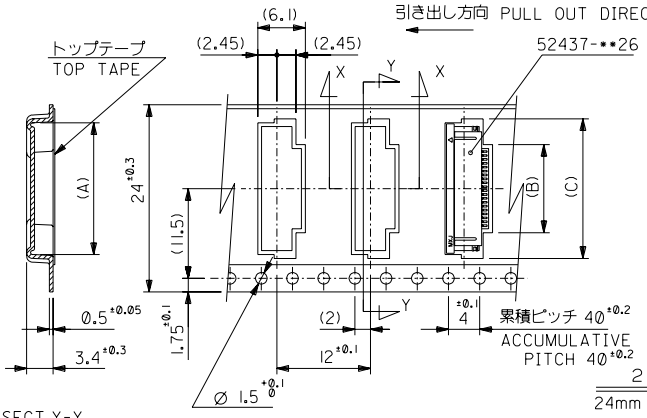

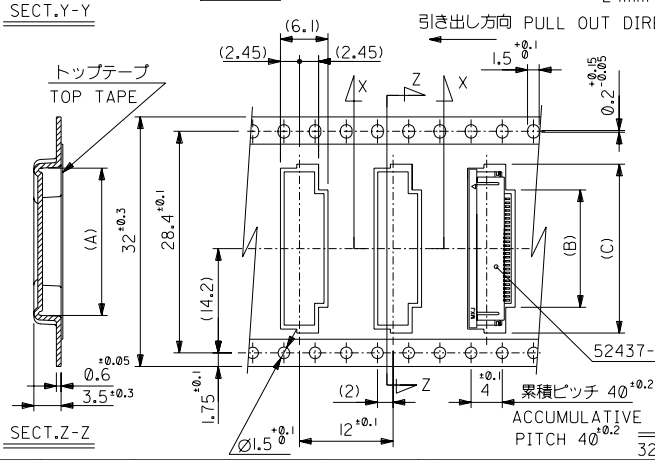

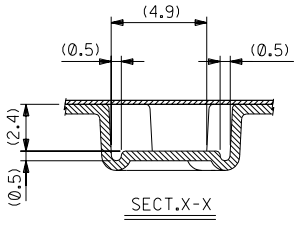

キャリアテープ幅 CARRIER TAPE WIDTH	E	D	(C)	(B)	(A)	MATERIAL NO.	極数 CIRCUIT
32	37.4	33.4	22.4	15.8	21.4	52437-2972	29
			21.9	15.3	20.9	-2872	28
			21.4	14.8	20.4	-2772	27
			20.9	14.3	19.9	-2672	26
			20.4	13.8	19.4	-2572	25
			19.9	13.3	18.9	-2472	24
			19.4	12.8	18.4	-2372	23
			18.9	12.3	17.9	-2272	22
24	29.4	25.4	17.9	11.3	16.9	-2072	20
			17.4	10.8	16.4	-1972	19
			16.9	10.3	15.9	-1872	18
			16.4	9.8	15.4	-1772	17
			15.9	9.3	14.9	-1672	16
			15.4	8.8	14.4	-1572	15
			14.9	8.3	13.9	-1472	14
			14.4	7.8	13.4	-1372	13
			13.9	7.3	12.9	-1272	12
			13.4	6.8	12.4	-1172	11
			12.9	6.3	11.9	-1072	10
			12.4	5.8	11.4	-0972	9
			11.9	5.3	10.9	-0872	8
			11.4	4.8	10.4	-0772	7
			10.9	4.3	9.9	52437-0672	6

DO NOT SCALE DRAWING

REV	DESCRIPTION	EC NO.	DRWN	CH'K	APPR	DATE
A	REVISED	J2004-2350	N.AIDA	K.TOJO	M.SASAO	'04/02/09
0	RELEASED	J2004-1850	Y.SAKIYAMA	M.SASAO	M.SASAO	'04/01/08

MATERIAL 材料: SHEET 1 OF 3 参照 REFER TO SHEET 1 OF 3
FINISH 仕上げ: //
WIRE RANGE 適用電線範囲: //
INS. RANGE 被覆外径: //

GENERAL TOLERANCES: (UNLESS SPECIFIED) 一般公差
10 UNDER 未満 ±0.2
10 OVER 以上 30 UNDER 未満 ±0.25
30 OVER 以上 ±0.3
ANGLE 角度 ±3°

SCALE: //
DESIGN UNITS: ☒mm ☐INCH
THIRD ANGLE PROJECTION
DIMENSIONS: ☐ mm/INCH ☐ INCH/mm ☒ mm ONLY
SHT | REV
REVISE ON CAD ONLY

DRAWN BY & DATE: Y.SAKIYAMA '04/01/08
CHECKED BY & DATE: M.SASAO '04/01/08
APPROVED BY & DATE: M.SASAO '04/01/08
CAD FILENAME: SD-52437-018.S02

TITLE: 0.5 FPC Conn Assy ZIF SMT RA With Tape Embstp Pkg -LEAD FREE-
molex MOLEX INCORPORATED
MATERIAL NO. 52437-**72
DRAWING NO. SD-52437-018
SHEET NO. 2 OF 3
SIZE B

THIS DRAWING CONTAINS INFORMATION THAT IS PROPRIETARY TO MOLEX INCORPORATED AND SHOULD NOT BE USED WITHOUT WRITTEN PERMISSION.

EN-02J(097) MXJ-54

DWG. NO. SD-52437-018

Downloaded from Elcodis.com electronic components distributor

DWG. NO. SD-52437-018

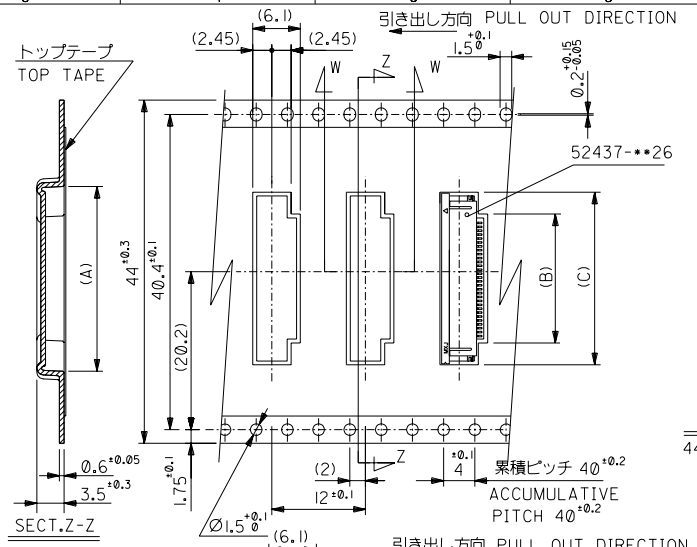

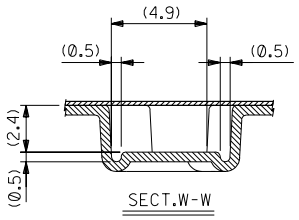

44mm幅キャリアテープ
44mm WIDTH CARRIER TAPE

44	49.4	45.4	22.9	16.3	21.9	52437-3072	30
キャリアテープ幅 CARRIER TAPE WIDTH	E	D	(C)	(B)	(A)	MATERIAL NO.	極数 CIRCUIT

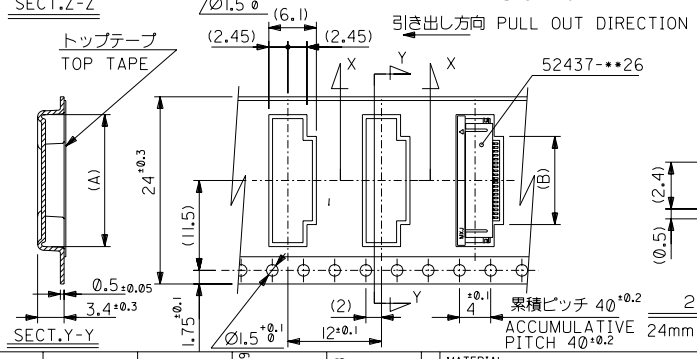

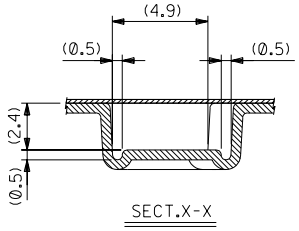

24mm幅キャリアテープ
24mm WIDTH CARRIER TAPE

24	29.4	25.4	11.8	17.4	52437-2172	21
キャリアテープ幅 CARRIER TAPE WIDTH	E	D	(B)	(A)	MATERIAL NO.	極数 CIRCUIT

DO NOT SCALE DRAWING

EC NO.			
DRWN:			
CH'K:			
APPR:			
REVISED '04/02/09	EC NO. J2004-2350	DRWN: N.AIDA	CH'K: K.TOJO	APPR: M.SASAO	A
RELEASED '04/01/08	EC NO. J20004-1850	DRWN: Y.SAKIYAMA	CH'K: M.SASAO	APPR: M.SASAO	0

DESCRIPTION

MATERIAL 材料: SHEET 1 OF 3 参照 REFER TO SHEET 1 OF 3

FINISH 仕上げ: //

WIRE RANGE 適用電線範囲: //

INS. RANGE 被覆外径: //

REV

GENERAL TOLERANCES: (UNLESS SPECIFIED) 一般公差

10 UNDER 未満	±0.2
10 OVER 以上 30 UNDER 未満	±0.25
30 OVER 以上	±0.3
ANGLE 角度	±3°

SCALE: //

DESIGN UNITS: ☒mm ☐INCH

THIRD ANGLE PROJECTION

DIMENSIONS: ☐ mm/INCH ☐ INCH/mm ☒ mm ONLY

SHT | REV

REVISE ON CAD ONLY

DRAWN BY & DATE: Y.SAKIYAMA '04/01/08

CHECKED BY & DATE: M.SASAO '04/01/08

APPROVED BY & DATE: M.SASAO '04/01/08

CAD FILENAME: SD-52437-018.S03

TITLE: 0.5 FPC Conn Assy ZIF SMT RA With Tape Embstp Pkg -LEAD FREE-

molex MOLEX INCORPORATED

MATERIAL NO. 52437-**72 | DRAWING NO. SD-52437-018 | SHEET NO. 3 OF 3

THIS DRAWING CONTAINS INFORMATION THAT IS PROPRIETARY TO MOLEX INCORPORATED AND SHOULD NOT BE USED WITHOUT WRITTEN PERMISSION.

SIZE B

EN-02J(097) MXJ-54

SD-52437-018.S03

Downloaded from Elcodis.com electronic components distributor