NUMBER 487508

METRIC

(3rd ANGLE PROJECTION)

DIMENSIONS IN MM [INCHES], DO NOT SCALE PRINT

PRINT DIST

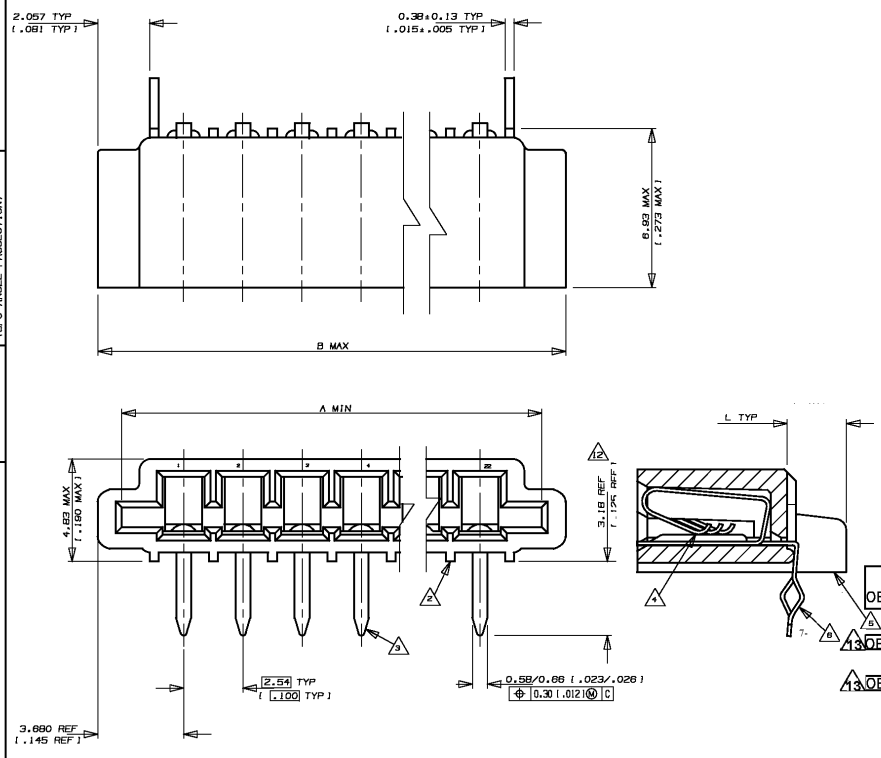

NOTES

1 CONNECTOR WILL ACCEPT FLEXIBLE PRINTED CIRCUIT OR FLAT FLEXIBLE CABLE ON 2.54 [.100] CENTERS IN A THICKNESS RANGE OF 0.127 TO 0.381 [.005 TO .015] IN CONTACT AREA

2 STAND-OFFS PREVENT SOLVENT ENTRAPMENT

3 LEAD-IN ON PINS FOR EASE OF INSERTION INTO BOARD

4 SEQUENTIAL CONTACTS REDUCE CABLE INSERTION FORCE

5 STABILIZING WING MAY BE REMOVED BY CUSTOMER IF NECESSARY

6 ALTERNATING CONTACT FORM RETAINS CONNECTOR IN P.C. BOARD DURING SOLDER OPERATION

7 ACCEPTS CABLE OR CIRCUITRY WITH EXPOSED CONDUCTORS FACING TOWARD OR AWAY FROM THE BOARD SURFACE

8 REFER TO APPLICATION SPEC 114-2062

9 MATERIAL
HOUSING : GLASS REINFORCED POLYESTER THERMOPLASTIC UL 94 V0 RATED, BLACK
CONTACT : PHOS BRONZE

10 CONNECTOR IS HIGH NORMAL FROCE

11 MATTE TIN, 0.005 [.0002] MIN THK OVER COPPER 0.003 [.00015] MIN THK ON ENTIRE CONTACT

12 AREA INDICATED SHALL MEET SOLDERABILITY SPEC 109-11-1

13 OBSOLETE PARTS: OBSOLETE CIS STREAMLINING PER D.RENAUD/D.SINISI

LEAD FREE PART NO	L	B	A	POS	SUPERSEDED PART NO
~~2-487508-8~~ 13 OBSOLETE	1.087 [.042]	25.22 [.993]	23.01 [.906]	8	2-487508-8
~~2-487508-1~~		80.78 [2.393]	58.57 [2.306]	22	2-487508-1
~~2-487508-0~~		58.24 [2.293]	56.03 [2.206]	21	2-487508-0
6-487508-9		55.70 [2.193]	53.49 [2.106]	20	1-487508-9
6-487508-8		53.18 [2.093]	50.85 [2.006]	19	1-487508-8
~~6-487508-7~~ 13 OBSOLETE		50.62 [1.993]	48.41 [1.906]	18	1-487508-7
6-487508-6		48.08 [1.893]	45.87 [1.806]	17	1-487508-6
6-487508-5		45.54 [1.793]	43.33 [1.706]	16	1-487508-5
~~6-487508-4~~ 13 OBSOLETE		43.00 [1.693]	40.79 [1.606]	15	1-487508-4
6-487508-3		40.46 [1.593]	38.25 [1.506]	14	1-487508-3
6-487508-2		37.92 [1.493]	35.71 [1.406]	13	1-487508-2
6-487508-1		35.38 [1.393]	33.17 [1.306]	12	1-487508-1
6-487508-0		32.84 [1.293]	30.63 [1.206]	11	1-487508-0
5-487508-9		30.30 [1.193]	28.09 [1.106]	10	487508-9
5-487508-8		27.76 [1.093]	25.55 [1.006]	9	487508-8
5-487508-7		25.22 [.993]	23.01 [.906]	8	487508-7
5-487508-6		22.68 [.893]	20.47 [.806]	7	487508-6
5-487508-5		20.14 [.793]	17.93 [.706]	6	487508-5
5-487508-4		17.60 [.693]	15.39 [.606]	5	487508-4
5-487508-3		15.06 [.593]	12.85 [.506]	4	487508-3
5-487508-2		12.52 [.493]	10.31 [.406]	3	487508-2
~~5-487508-1~~ 13 OBSOLETE	2.540 [.100]	9.98 [.393]	7.77 [.306]	2	487508-1

LTR	(REVISION RECORD)	DR	CHK	DATE
E2	REVISED PER ECO-09-026346	KK	AEG	27NOV09
E1	REVISED AS PER ECR-06-04332	PM	KS	21FEB06
E	REVISED FR00-0011-04	SD	PCH	19FEB04
D	REVISED FP00-0120-98	LWY	TLP	31MAR98
C	REDRAWN DY/EC/0784	LWY	SL	30.7.93

Copyright © 1993
Copyright © 1993
AMP MANUFACTURING (SINGAPORE) PTE. LTD.
ALL RIGHTS RESERVED.

AMP

AMP MANUFACTURING (SINGAPORE) PTE. LTD.

(WIRE RANGE) mm² (AWG -)

(INSULATION DIA.) - mm

(MATERIAL) 9

(FINISH) 11

DR. WYLEE 30.7.93

DE. A.SOH

CHK. SALLY 30.7.93

APP. PETER de JONG

(NAME) TRIOMATE HORIZONTAL CABLE ENTRY FOR 1.57[.062] THK P.C. BOARD

(GENERAL TOLERANCE) ±0.38 [±.015]

SIZE A3 | LOC DY | (No.) 487508

(SCALE) 6:1 | REV. E2 | SHEET 1 OF 1

(CUSTOMER DRAWING)

Downloaded from Elcodis.com electronic components distributor