THIS DRAWING IS UNPUBLISHED. RELEASED FOR PUBLICATION .19 .

© COPYRIGHT 19 BY AMP INCORPORATED. ALL RIGHTS RESERVED.

LOC	DIST
GP	00

REVISIONS

P	LTR	DESCRIPTION	DATE	DWN	APVD
	H	OBS -7 & REDRAWN ON CAD PER EC 0420-143-96	29 OCT 97	TS	SB
	J	REV PER EC 0UEO-0002-01	09 JAN 02	JR	JG

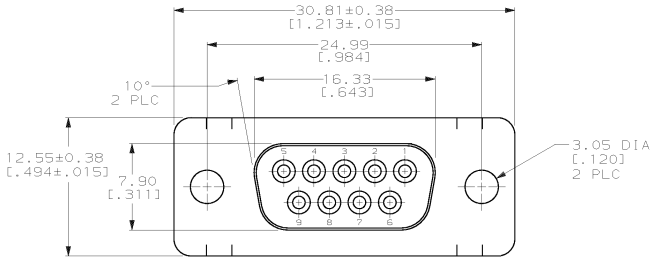

1. CONNECTOR ACCEPTS SIZE 20 DF SOCKET CONTACTS, RETENTION TINES ARE AN INTEGRAL PART OF INSERT.
2. CONNECTOR COMPLIES WITH 108-40005 WHERE APPLICABLE.
3. NYLON, FLAME RETARDANT, 94V-0 RATED, GLASS FILLED, BLACK.
4. STEEL PER ASTM A109.
5. ZINC PLATED PER ASTM B633; TYPE II; CLASS SC1; YELLOW CHROMATE.
6. TIN PLATED PER MIL-T-10727 OVER COPPER PER MIL-C-14550.
7. CHROME PLATED.

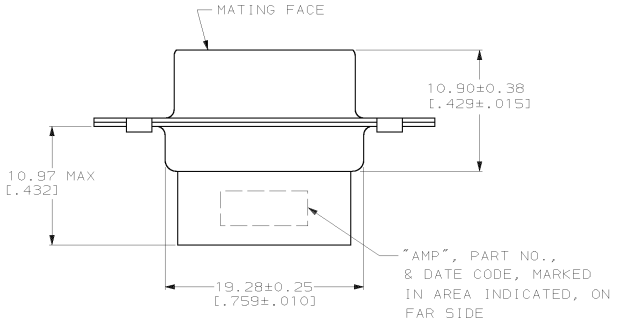

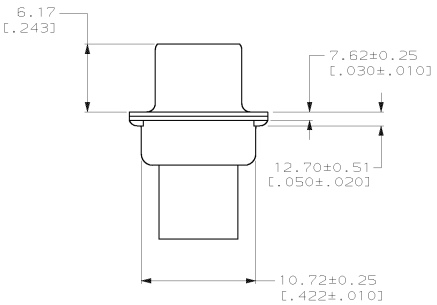

OBSOLETE	SMALL PACK	5	205203-6
	STANDARD	3	205203-3
	STANDARD	1	205203-1
	PACKAGING TYPE	SHELL FINISH	PART NO

THIS DRAWING IS A CONTROLLED DOCUMENT.

DIMENSIONS: mm [INCHES]

TOLERANCES UNLESS OTHERWISE SPECIFIED:
0 PLC ±-
1 PLC ±-
2 PLC ±0.13 [.005]
3 PLC ±-
4 PLC ±-
ANGLES -
FINISH -

MATERIAL: MOLDED PARTS: 3; SHELLS: 4
SHELLS: SEE TABLE

DWN S. WELDON 7-19-85
CHK J. GERACE 7-29-85
APVD V. KUMAR 7-31-85

PRODUCT SPEC -
APPLICATION SPEC -
WEIGHT -

CUSTOMER DRAWING

AMP Incorporated
Harrisburg, PA 17105-3608

NAME: RCPT CONNECTOR, SIZE 1, 9 POSN, AMPLIMITE™, HDP

SIZE	CAGE CODE	DRAWING NO	RESTRICTED TO
A2	00779	C- 205203	-

SCALE	SHEET	OF	REV
4:1	1	1	J

AMP 1471-9 REV 11JUN97

17-NOV-97 10:13:13 amp08242 /home/ssrv026d/dsk04/dept4129/amp08242/edsmod

205203

Downloaded from Elcodis.com electronic components distributor