DRAWING MADE IN THIRD ANGLE PROJECTION

THIS DRAWING IS UNPUBLISHED. RELEASED FOR PUBLICATION ,19 .

© COPYRIGHT 19 BY AMP INCORPORATED. ALL INTERNATIONAL RIGHTS RESERVED.

LOC	DIST
BD	48

REVISIONS				
P	F	ZONE	LTR	DESCRIPTION	DATE	APPD
			C	REDRAWN	5-30-90	–
			D	REV PER ECN BD4294	09/24/90	–
			E	OBS -2 PER ECN BD6177	06/18/92	TS
			F	ADDED -3 PER NPR 4258	07/09/92	SB

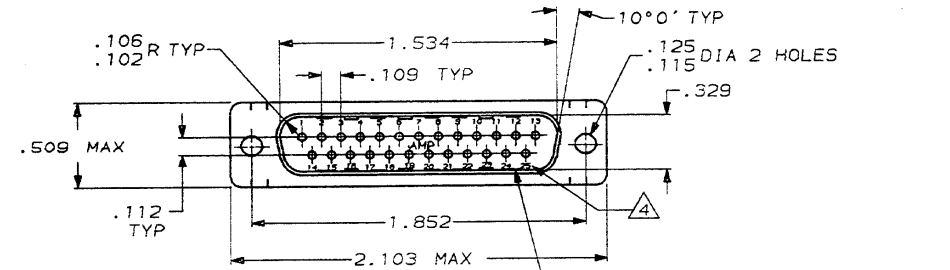

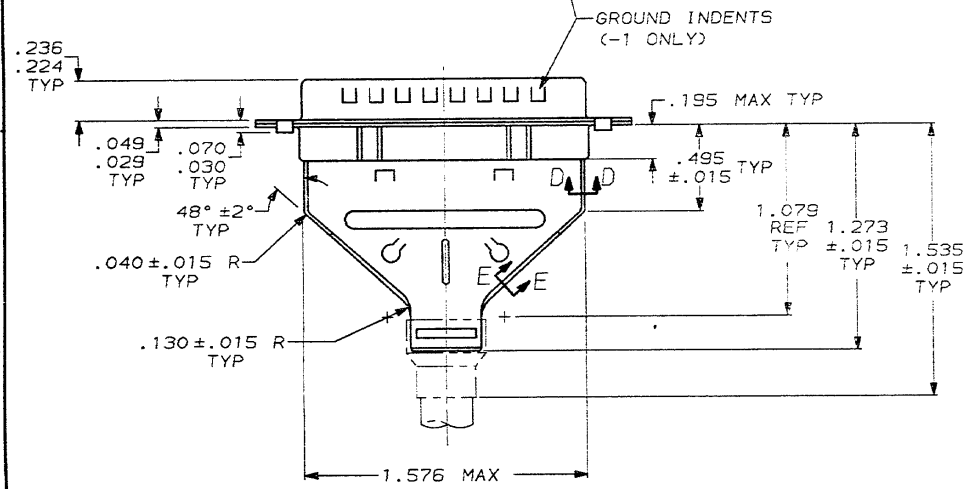

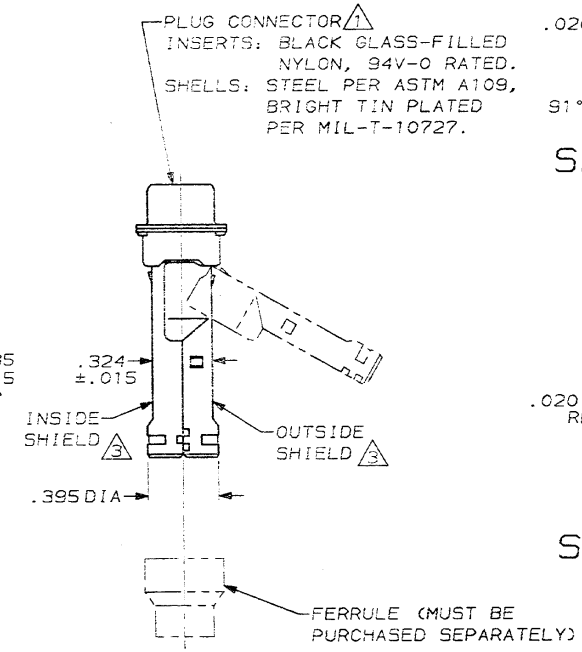

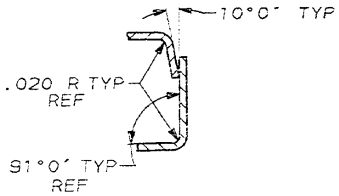

SECTION D-D

SCALE 4:1

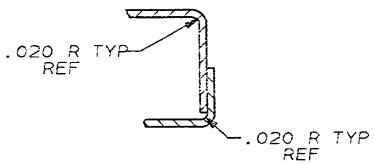

SECTION E-E

SCALE 4:1

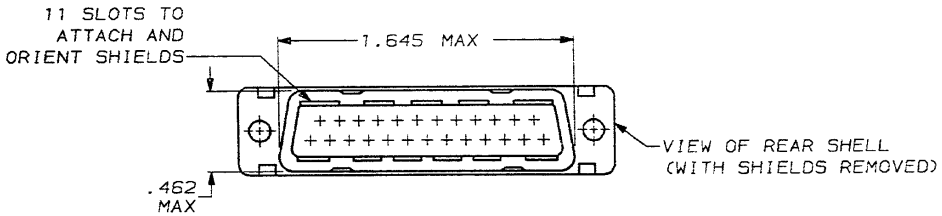

OBSOLETE	GROUNDING INDENTS	5 PART NUMBER
	NO	747554-2
	YES	747554-1

1. PLUG ACCEPTS SIZE 20 PIN CONTACTS (CONTACTS MUST BE ORDERED SEPARATELY).
2. ALL PARTS SHIPPED UNASSEMBLED, EACH PART INDIVIDUALLY BULK PACKED.
3. SHIELDS: MATERIAL-.020 THICK STEEL, TIN PLATED PER MIL-T-10727.
4. RAISED CAVITY IDENTIFICATION AND AMP TRADEMARK.
5. SEE RESTRICTED CUSTOMER DRAWING 747554-3.

DO NOT SCALE PRINT. UNLESS SPECIFIED DIMENSIONS IN INCHES TOLERANCES ON : 2 PLC DEC ± – 3 PLC DEC ± .005 ANGLES ± 0°30'	DR 5-30-90 J GALLUCCI BG	AMP INCORPORATED Harrisburg, Pa. 17105
	CHK 8-31-90 J.McCLINTON	
	APPD 9-4-90 BOB TAYLOR	NAME KIT, PLUG, SHIELDING HARDWARE, SIZE 3, 25 POSN, HDP-20, AMPLIMITE™
MATERIAL SEE CALL OUT & NOTE 3	APPD 9-4-90 J.ASSINI	
	PRODUCT SPEC –	
FINISH SEE CALL OUT & NOTE 3	APPLICATION SPEC –	SIZE C / FSCM NO 00779 / DRAWING NO 747554
	WEIGHT –	SCALE 2:1 / SHEET 1 OF 1

CUSTOMER DRAWING

AMP 1471-6 REV 3-89

09 JUL 1992 08:47:42 amp06568 /home/sq026o/dept4023/amp06568/u.4258

Downloaded from Elcodis.com electronic components distributor