THIS DRAWING IS UNPUBLISHED. RELEASED FOR PUBLICATION -.-.-
© COPYRIGHT - - BY TYCO ELECTRONICS CORPORATION. ALL RIGHTS RESERVED.

LOC	DIST
DF	DO

REVISIONS

P	LTR	DESCRIPTION	DATE	DRN	APVD
	S	REV PER ECO-07-002868	20FEB07	PY	ND

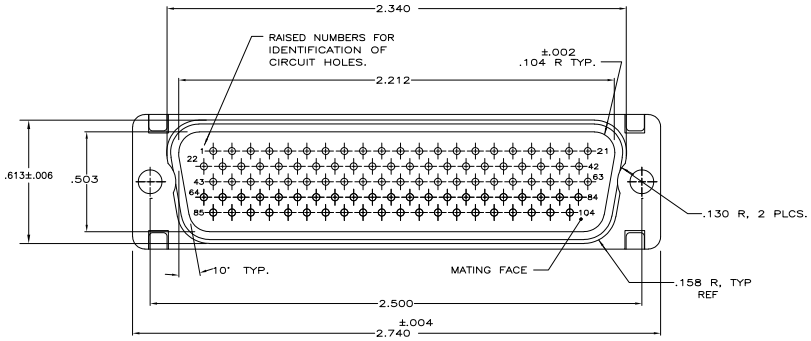

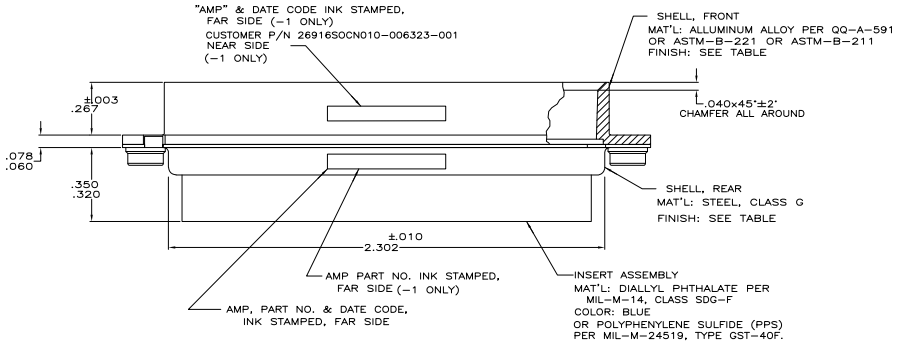

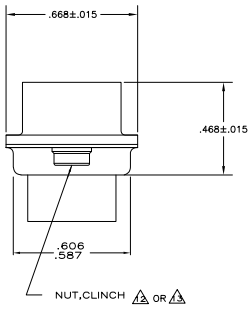

1. THIS PLUG WILL MATE WITH ANY 104 POSN., SIZE 6 RECEPTACLE IN AMPLIMITE SERIES.
2. MAXIMUM WIRE INSULATION TO BE USED WITH THIS PLUG IS .054 DIA.
3. SST RETENTION CLIPS ARE INCLUDED IN INSERTS.
4. THIS PLUG IS DESIGNED TO CONFORM TO THE LATEST ISSUE OF MIL-C-24308.
5. CONNECTOR SUPPLIED WITHOUT CONTACTS.
6. THIS CONNECTOR WILL ACCEPT SIZE 22DF CONTACTS P/N 66556-3, 66718-4 OR SIZE 22DM CONTACTS P/N 204370-2 OR ANY OTHER SIZE 22 CONTACT IN THE AMPLIMITE SERIES.
7. TO INSTALL OR REMOVE CONTACTS USE INSERTION/EXTRACTION TOOL P/N 91067-1 OR MIL NUMBER M81969/1-04.

8. WITHOUT CLINCH NUTS; MOUNTING HOLE DIA .120
9. WITHOUT CUSTOMER PART NO.
10. FINISH: CADMIMUM PER QQ-P-416
11. FINISH: PLATED CADMIUM PER QQ-P-416, YELLOW CHROMATE
12. NUT,CLINCH - IN ACCORDANCE WITH M45938/6-2 OR M45938/6-2C
13. NUT,CLINCH,2-56 UNC - MATERIAL:CARBON STEEL FINISH: YELLOW CHROMATE OVER CADMIUM PER QQ-P-416
14. ZINC PLATE .000200 [0.0050] MIN. THICK PER ASTM-B-663, YELLOW CHROMATE.

SAME AS -1 EXCEPT: 1 2	212933-4
SAME AS -1 EXCEPT: 8 9 11	212933-3
SAME AS -1 EXCEPT: 8 9 14	212933-2
AS SHOWN 10 13	212933-1
DESCRIPTION	PART NO

THIS DRAWING IS A CONTROLLED DOCUMENT.

DIMENSIONS: INCHES

TOLERANCE UNLESS OTHERWISE SPECIFIED: 0 PLC ± - ; 1 PLC ± - ; 2 PLC ± - ; 3 PLC ± .005 ; 4 PLC ± - ; ANGLES ± -

MATERIAL: SEE CALLOUTS

FINISH: SEE CALLOUTS

DR D.D.FERDMAN 5-31-85
DS J.L.BROSCHARD 5-31-85
APVD J.L.BROSCHARD 5-31-85
PRODUCT SPEC —
APPLICATION SPEC —
WEIGHT —

Tyco Electronics Corporation
Harrisburg, PA 17105-3608

NAME: PLUG ASSY,104 POSN,SIZE 6 SERIES 90,BLINDMATE,AMPLIMITE

SIZE A1 CAGE CODE 00779 DRAWING NO C-212933 RESTRICTED TO —

CUSTOMER DRAWING SCALE 4:1 SHEET 1 OF 1 REV S

AMP 4805 REV 31MR2000

Downloaded from Elcodis.com electronic components distributor