THIS DRAWING IS UNPUBLISHED. RELEASED FOR PUBLICATION -.-.-
© COPYRIGHT - BY TYCO ELECTRONICS CORPORATION. ALL INTERNATIONAL RIGHTS RESERVED.

LOC	DIST
—	—

REVISIONS

P	LTR	DESCRIPTION	DATE	DWN	APVD
	E	REV PER ECO-08-030664	17APR09	PY	RL

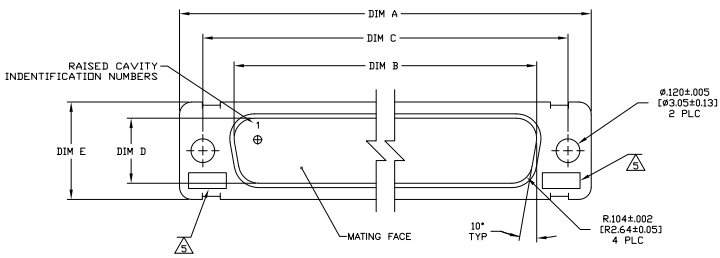

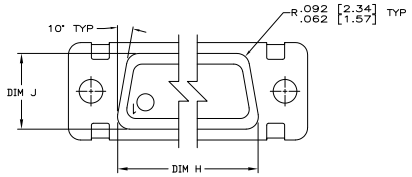

VIEW Z—Z

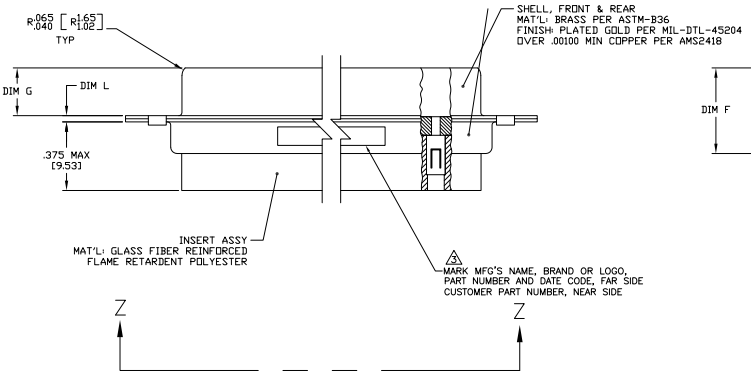

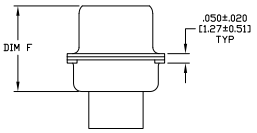

1. THIS CONNECTOR ASSEMBLY IS SUPPLIED WITH Be Cu CONTACT RETENTION CLIPS INSTALLED IN THE INSERT ASSEMBLY.
2. THIS CONNECTOR ASSEMBLY MATES WITH ANY RECEPTACLE CONNECTOR WITH THE SAME INSERT ARRANGEMENT AND DIMENSIONAL REQUIREMENTS PER MIL-C-24308.
3. MARKED WITH .047 [1.19]-.062 [1.57] HIGH CHARACTERS. FAR SIDE REFERS TO THE WIDE SIDE OF THE KEYSTONE. NEAR SIDE REFERS TO THE NARROW SIDE OF THE KEYSTONE.
4. MAXIMUM WIRE INSULATION TO BE USED WITH THIS CONNECTOR ASSEMBLY IS .068 [1.73] DIAMETER.
5. UL/CSA DESIGNATION STAMPED IN THIS AREA.
6. SPECIAL REQUIREMENTS PER BOEING 1A01 DOCUMENT.
7. BUILT TO ORDER, NO INVENTORY OF THIS PART NUMBER IS TO BE KEPT. SINGLE LOT DATE CODE REQUIRED.

CUSTOMER MARKING	L	J	H	G	F	E	D	C	B	A	INSERT ARRANGEMENT	NO OF POS	SHELL SIZE	PART NUMBER
1A01—009PHW	.049 [1.24] .029 [0.74]	.432 [10.97] .412 [10.46]	2.282 57.96 2.262 57.45	.236 [5.99] .224 [5.69]	.436 [11.07] .416 [10.57]	.509 [12.93] .479 [12.17]	.334 [8.48] .324 [8.23]	2.505 [63.63] 2.495 [63.37]	2.187 [55.55] 2.177 [55.30]	2.744 [69.70] 2.714 [68.94]	MS18276—1	37	4	1—211621—1
1A01—009PHA	.049 [1.24] .029 [0.74]	.432 [10.97] .412 [10.46]	2.282 57.96 2.262 57.45	.236 [5.99] .224 [5.69]	.436 [11.07] .416 [10.57]	.509 [12.93] .479 [12.17]	.334 [8.48] .324 [8.23]	2.505 [63.63] 2.495 [63.37]	2.187 [55.55] 2.177 [55.30]	2.744 [69.70] 2.714 [68.94]	MS18276—1	37	4	211621—1

THIS DRAWING IS A CONTROLLED DOCUMENT.

DIMENSIONS: INCHES

TOLERANCE UNLESS OTHERWISE SPECIFIED:
0 PLC ± —
1 PLC ± —
2 PLC ± —
3 PLC ± .005 [0.13]
4 PLC ± —
ANGLES ± 1°

MATERIAL: SEE CALLOUTS
FINISH: SEE CALLOUTS

DR: C.C.THOMAS 3-26-07
CK: D. MILLER 3-27-07
APVD: D. MILLER 3-27-07
PRODUCT SPEC: —
APPLICATION SPEC: —
WEIGHT: —

CUSTOMER DRAWING

Tyco Electronics Corporation
Harrisburg, PA 17105-3608

NAME: PLUG ASSEMBLY, ANPLIMITE
37 POSN, SIZE 4, SERIES 109
NON-MAGNETIC

SIZE: A1 | CAGE CODE: 00779 | DRAWING NO: C-211621 | RESTRICTED TO: —

SCALE: 4:1 | SHEET 1 OF 1 | REV E

4805 (1/98)

Downloaded from Elcodis.com electronic components distributor