THIS DRAWING IS UNPUBLISHED. RELEASED FOR PUBLICATION - .N/A -
© COPYRIGHT N/A BY TYCO ELECTRONICS CORPORATION. ALL RIGHTS RESERVED.

| USC | DIST |
|---|---|
| DF | D0 |

REVISIONS

| P | LTR | DESCRIPTION | DATE | DWN | APVD |
|---|---|---|---|---|---|
| | P | REV PER ECR-08-030672 | 22OCT08 | PK | BW |

1. THIS PLUG IS DESIGNED TO CONFORM TO THE LATEST ISSUE OF MIL-C-24308.
2. MAXIMUM WIRE INSULATION TO BE USED WITH THIS PLUG IS ø.068.
3. STAINLESS STEEL RETENTION CLIPS ARE INCLUDED IN INSERTS.
4. PACKAGE MARKED M 24308/4-263F.
5. THIS PLUG WILL ACCEPT SIZE 20 PIN CONTACT M39029/64-369 OR ANY TYCO ELECTRONICS HD-20 PIN CONTACT.
6. MFG,S PART NO. MARKED ON CONNECTOR REPRESENTS KIT NUMBER WITH CONTACTS.
7. UL/CSA DESIGNATION MARKED IN THIS AREA.
8. FINISH: BRIGHT TIN PER ASTM-B-545 .000400-.000550 THK OVER COPPER PER AMS2418 .000050 MIN THK.
9. FRONT SHELL HAS GROUNDING INDENTS, 205170-4 ONLY, (NOT SHOWN).

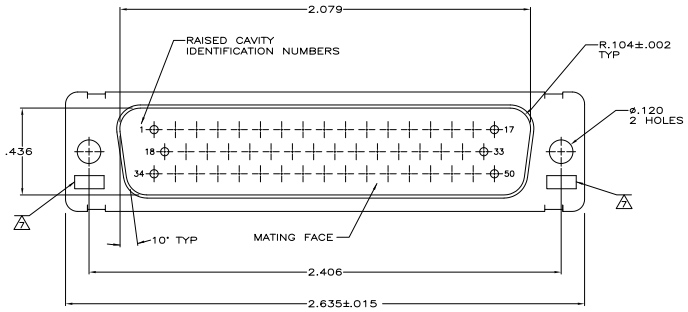


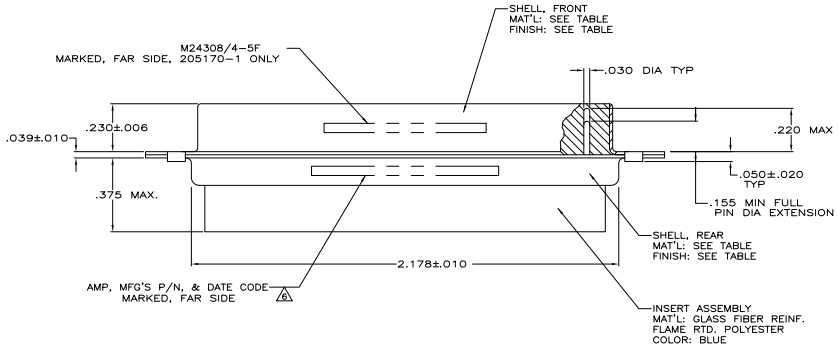


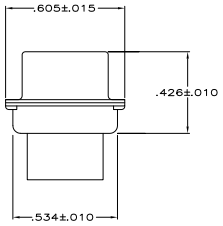


| | REMARKS | FINISH | SHELL MAT'L | PART NO. |
|---|---|---|---|---|
| OBSOLETE | – | 8 | STEEL PER ASTM-A-109 | 205170-5 |
| | 9 | 8 | STEEL PER ASTM-A-109 | 205170-4 |
| SUPSD BY 206804-2 | – | CADMIUM PER QQ-P-416 | BRASS | 205170-2 |
| | 6 | CADMIUM PER QQ-P-416 | STEEL PER ASTM-A-109 | 205170-1 |

THIS DRAWING IS A CONTROLLED DOCUMENT.

| | | |
|---|---|---|
| DR | F.C.THOMAS | 08-DEC-87 |
| CK | | 10-DEC-87 |
| APV | F.C.BALLEW | 10-DEC-87 |
| PRODUCT SPEC | – | |
| APPLICATION SPEC | – | |
| WEIGHT | – | |

Tyco Electronics Corporation
Harrisburg, PA 17105-3608

DIMENSIONS: INCHES
TOLERANCE UNLESS OTHERWISE SPECIFIED:
0 PLC ± –
1 PLC ± –
2 PLC ± .010
3 PLC ± .005
4 PLC ± –
ANGLES ± 0°30'
MATERIAL: SEE CALLOUTS
FINISH: SEE CALLOUTS

NAME: AMPLIMITE PLUG FOR PIN CONTACTS HI-DENSITY HD-20 CONNECTOR SIZE 5 (50 POSN) SERIES 109

| SIZE | CAGE CODE | DRAWING NO | RESTRICTED TO |
|---|---|---|---|
| A1 | 00779 | C-205170 | – |

CUSTOMER DRAWING SCALE 4:1 SHEET 1 OF 1 REV P

AMP 4805 REV 31MAR2000

Downloaded from Elcodis.com electronic components distributor