THIS DRAWING IS UNPUBLISHED. RELEASED FOR PUBLICATION - N/A -
© COPYRIGHT N/A BY TYCO ELECTRONICS CORPORATION. ALL RIGHTS RESERVED.

USE	DIST
DF	D0

REVISIONS

P	LTR	DESCRIPTION	DATE	DWN	APVD
	C	REVISED PER ECO-09-008889	24-03-09	CT	RL

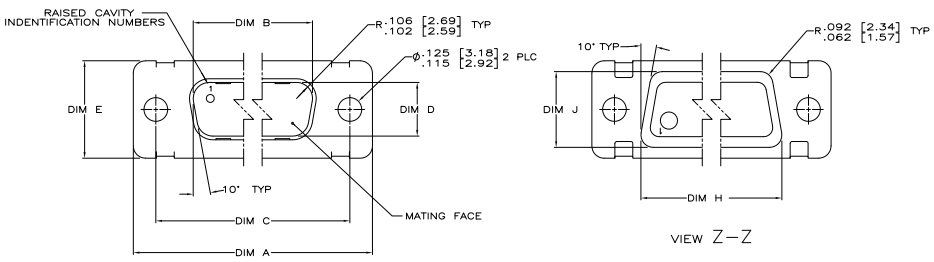

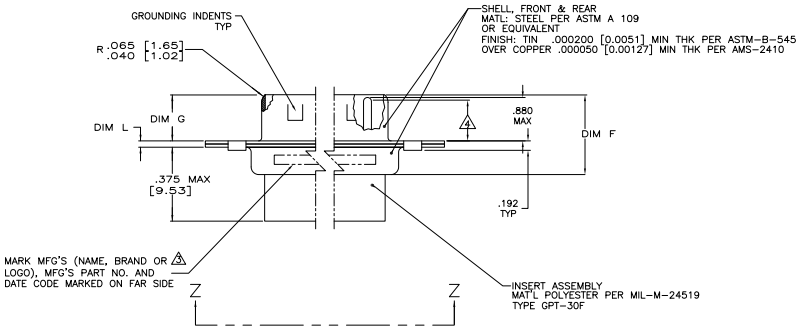

1. THIS CONNECTOR ASSEMBLY IS SUPPLIED WITH METAL CONTACT RETENTION CLIPS INSTALLED IN THE INSERT ASSEMBLY.
2. THIS CONNECTOR ASSEMBLY MEETS THE REQUIREMENTS OF MIL-C-24308 AND MATES WITH ANY RECEPTACLE CONNECTOR WITH THE SAME INSERT ARRANGEMENT.
3. MARK WITH .047 [1.19]–.062 [1.57] HIGH CHARACTERS. FAR SIDE REFERS TO THE WIDE SIDE OF THE KEYSTONE. NEAR SIDE REFERS TO THE NARROW SIDE OF THE KEYSTONE. IF THE REAR SHELL IS TOO SMALL FOR THE ENTIRE MFG'S PART NUMBER, MARKING SHALL BE LOCATED AS FOLLOWS:
   A. MFG'S (NAME, BRAND OR LOGO) AND DATE CODE ON REAR SHELL, NEAR SIDE.
   B. MFG'S PART NUMBER ON REAR SHELL, FAR SIDE.
4. REQUIREMENT FOR FULL PIN DIAMETER EXTENSION: .164 [4.17] MIN, SHELL SIZES 1 AND 2. .155 [3.94] MIN, SHELL SIZES 3, 4, AND 5. CONTACT SHOWN INSTALLED FOR DIMENSIONAL REFERENCE ONLY.
5. MAXIMUM WIRE INSULATION TO BE USED WITH THIS CONNECTOR ASSEMBLY IS .072 [1.83] DIAMETER.
6. FOR CONTACT CRIMPING INSTRUCTION SHEET REFER TO MFG'S IS 7516. FOR CONTACT INSTALLATION AND REMOVAL INSTRUCTION SHEET REFER TO TE I.S. 7508.
7. THIS CONNECTOR ASSEMBLY IS DESIGNED TO ACCEPT SIZE 20 CRIMP TYPE PIN CONTACT MILITARY PART NO. M39029/64-369 (TE PART NO. 205089-1). FOR ALTERNATE CONTACT OPTIONS CONSULT THE TE CATALOG.
8. THIS DRAWING SHALL BE INTERPRETED IN ACCORDANCE WITH APPLICABLE STANDARDS LISTED IN MIL-STD-100.

L	J	H	G	F	E	D	C	B	A	NO OF POS	SHELL SIZE	MFG'S PART NO. ON CONNECTOR	PART NUMBER
.049 [1.24] .029 [0.74]	.432 [10.97] .412 [10.46]	1.635 [41.53] 1.615 [41.02]	.238 [6.04] .229 [5.82]	.436 [11.07] .416 [10.57]	.509 [12.93] .479 [12.17]	.334 [8.48] .324 [8.23]	1.857 [47.17] 1.847 [46.91]	1.539 [39.09] 1.529 [38.84]	2.103 [53.42] 2.073 [52.65]	25	3	1757510-3	1757510-3
.040 [1.02] .020 [0.51]	.432 [10.97] .412 [10.46]	1.093 [27.76] 1.073 [27.25]	.238 [6.04] .229 [5.82]	.432 [10.97] .412 [10.46]	.509 [12.93] .479 [12.17]	.334 [8.48] .324 [8.23]	1.317 [33.45] 1.307 [33.20]	.999 [25.37] .989 [25.12]	1.556 [39.52] 1.526 [38.76]	15	2	1757510-2	1757510-2
.040 [1.02] .020 [0.51]	.432 [10.97] .412 [10.46]	.769 [19.53] .749 [19.02]	.238 [6.04] .229 [5.82]	.432 [10.97] .412 [10.46]	.509 [12.93] .479 [12.17]	.334 [8.48] .324 [8.23]	.989 [25.12] .979 [24.87]	.671 [17.04] .661 [16.79]	1.228 [31.19] 1.198 [30.43]	9	1	1757510-1	1757510-1

THIS DRAWING IS A CONTROLLED DOCUMENT.

DIMENSIONS: INCHES

TOLERANCE UNLESS OTHERWISE SPECIFIED: 0 PLC ± – ; 1 PLC ± – ; 2 PLC ± – ; 3 PLC ± – ; 4 PLC ± – ; ANGLES ± 0°

MATERIAL: SEE CALLOUTS

FINISH: SEE CALLOUTS

DR C.C.THOMAS 17JAN09
CK D.MILLER 17JAN09
APV D.MILLER 17JAN09
PRODUCT SPEC MIL-C-24308
APPLICATION SPEC –
WEIGHT –

Tyco Electronics Corporation
Harrisburg, Pa 17105-3608

NAME AMPLIMITE PLUG ASSEMBLY,SERIES 109, WITH TIN PLATED SHELLS AND GROUNDING INDENTS

SIZE A1 CAGE CODE 00779 DRAWING NO C-1757510 RESTRICTED TO –

CUSTOMER DRAWING SCALE 4:1 SHEET 1 OF 1 REV C

AMP 4805 REV 31MAR2000

Downloaded from Elcodis.com electronic components distributor