THIS DRAWING IS UNPUBLISHED: RELEASED FOR PUBLICATION -/-/-
© COPYRIGHT - BY TYCO ELECTRONICS CORPORATION. ALL RIGHTS RESERVED.

| LOC | DIST |
|---|---|
| DF | DO |

REVISIONS

| P | LTR | DESCRIPTION | DATE | DRN | APVD |
|---|---|---|---|---|---|
| | W | REV PER ECO 06-029489 | 12-18-06 | CT | DM |

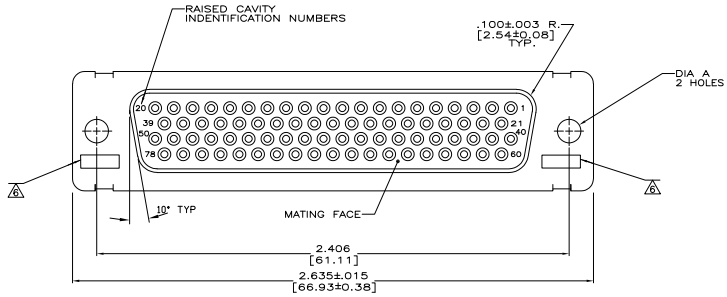


1. THIS RECEPTACLE WILL MATE WITH ANY PLUG CONNECTOR WITH THE SAME INSERT ARRANGEMENT AS DEFINED BY MS18277-2.
2. MAXIMUM WIRE INSULATION USED WITH THIS RCPT. IS .054 [1.37] DIA.
3. Be-Cu RETENTION CLIPS ARE INCLUDED IN INSERTS.
4. INSPECTION REQUIREMENTS PER R4383.
5. CONNECTOR SUPPLIED WITH 86 CONTACTS, AMP PART NUMBER 206071-1. INSPECTION REQUIREMENTS PER R4383 WITHOUT TESTS FOR HIGH ALTITUDE DIELECTRIC WITHSTANDING VOLTAGE AS CALLED FOR IN TABLE II SCREENING AND TESTING.
6. UL/CSA DESIGNATION STAMPED IN THIS AREA,OPTIONAL.
7. SPECIAL TESTING PER GE DOCUMENT 20025720. CONNECTOR SUPPLIED WITH 88 CONTACTS, AMP P/N 206071-1.
8. RESTRICTED TO CAE ELECTRONICS ONLY.
9. THESE CONNECTORS ARE QUALIFIED TO GODDARD SPACE FLIGHT CENTER SPECIFICATION S-311-P-4.
10. CONNECTOR SUPPLIED WITH 78 CONTACTS, AMP PART NUMBER 206071-1; (NOT INSTALLED).
11. SINGLE LOT DATE CODE AND 100% GROUP "A" ACCEPTANCE TESTING PER CI-2A-019.

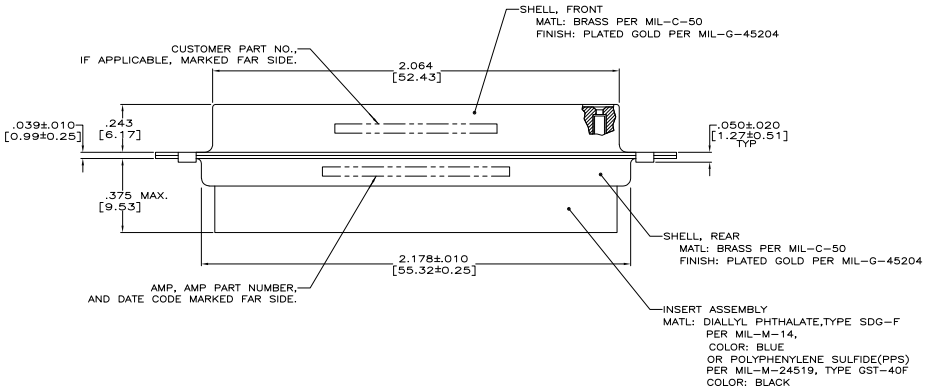


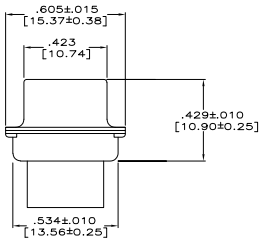




AMP P/N 206071-1
GSFC P/N G-08-S1

| | | | | |
|---|---|---|---|---|
| 11 | .120 [3.05] | CI-2A-019-004V-001 | 1-206505-4 | 1-206505-4 |
| | .120 [3.05] | 570566-5 | 1-206505-3 | 1-206505-3 |
| 10 | .120 [3.05] | LMSC 1621480-006 | 1-206505-2 | 1-206505-2 |
| - | .120 [3.05] | LMSC 1621480-006 | 1-206505-1 | 1-206505-1 |
| 8 9 | .120 [3.05] | 311P407-5S-B-12 | 206505-4 | 1-206505-0 |
| 7 | .120 [3.05] | 20025720P1078S | 206505-9 | 206505-9 |
| 5 | .120 [3.05] | R4383P78S | 206505-8 | 206505-8 |
| | .154 [3.91] | | 206505-7 | 206505-7 |
| 4 | .120 [3.05] | R4383P78S-2 | 206505-6 | 206505-6 |
| | .120 [3.05] | SC81D139-045 | 206505-5 | 206505-5 |
| 9 | .120 [3.05] | 311P407-5S-B-12 | 206505-4 | 206505-4 |
| | .154 [3.91] | | 206505-3 | 206505-3 |
| | .120 [3.05] | R9259P78S | 206505-2 | 206505-2 |
| 9 | .154 [3.91] | 311P407-5S-B-15 | 206505-1 | 206505-1 |
| REMARKS | DIA A | CUSTOMER P/N ON CONNECTOR | AMP P/N ON CONNECTOR | AMP P/N |

THIS DRAWING IS A CONTROLLED DOCUMENT.

DR M. CLOUSER 12-16-88
CK T. CANTLIN 1-26-89
APD F.KINSEY 1-26-89

DIMENSIONS: INCHES [mm]
TOLERANCE UNLESS OTHERWISE SPECIFIED:
0 PLC ± –
1 PLC ± –
2 PLC ± –
3 PLC ± .005 [0.13]
ANGLES ± 1°

MATERIAL: SEE CALLOUTS
FINISH: SEE CALLOUTS

PRODUCT SPEC: –
APPLICATION SPEC: –
WEIGHT: –

AMP
Tyco Electronics Corporation
Harrisburg, PA 17105-3608

NAME: AMPLIMITE NONMAGNETIC RECEPTACLE ASSEMBLY, SERIES 90, SHELL SIZE 5, 78 POSITION

SIZE A1 | CAGE CODE 00779 | DRAWING NO C-206505 | RESTRICTED TO –

CUSTOMER DRAWING | SCALE 4:1 | SHEET 1 OF 1 | REV W

AMP 4805 REV 31MW0000

18DEC2006 11:12am ua016412 H:\dacmed\206505_1_c.dwg

Downloaded from Elcodis.com electronic components distributor