THIS DRAWING IS UNPUBLISHED. RELEASED FOR PUBLICATION .19 .

© COPYRIGHT 19 BY AMP INCORPORATED. ALL RIGHTS RESERVED.

LOC	DIST
DF	D0

REVISIONS

P	LTR	DESCRIPTION	DATE	DWN	APVD
	C	REV PER 0G3D-0012-01	7-03	CT	DM

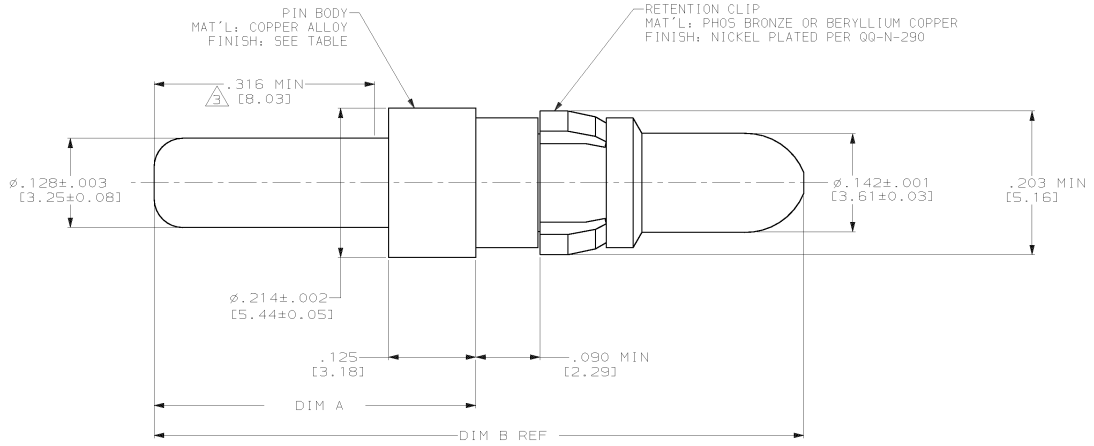

PRELIMINARY NOT RELEASED FOR PRODUCTION	2	.845 [21.46]	.375 [9.53]	1-449379-1
PRELIMINARY NOT RELEASED FOR PRODUCTION	2	.931 [23.65]	.461 [11.71]	1-449379-0
	1	.845 [21.46]	.375 [9.53]	449379-2
	1	.931 [23.65]	.461 [11.71]	449379-1
FINISH		DIM B	DIM A	PART NUMBER

1. FINISH: PLATED GOLD .000050 [0.00127] MIN THK PER MIL-G-45204 OVER NICKEL .000050 [0.00127] MIN THK PER QQ-N-290.
2. FINISH: PLATED GOLD .000030 [0.00076] MIN THK PER MIL-G-45204 OVER NICKEL .000050 [0.00127] MIN THK PER QQ-N-290.
3. THIS AREA SHALL SATISFY THE REQUIREMENTS OF MIL-STD-202, METHOD 208.
4. THIS CONTACT CAN BE USED IN ANY AMPLIMITE PLUG CONNECTOR WITH SIZE 8 CONTACT CAVITIES.

THIS DRAWING IS A CONTROLLED DOCUMENT.

DIMENSIONS: INCHES [mm]

TOLERANCES UNLESS OTHERWISE SPECIFIED:
0 PLC ±-
1 PLC ±-
2 PLC ±-
3 PLC ±.005 [0.13]
4 PLC ±-
ANGLES ±-

MATERIAL: SEE CALLOUTS
FINISH: SEE TABLE

DWN C.C.THOMAS 11/10/00
CHK D.MILLER 11/10/00
APVD D.MILLER 11/10/00
PRODUCT SPEC —
APPLICATION SPEC —
WEIGHT —

AMP Incorporated
Harrisburg, PA 17105-3608

NAME: ASSEMBLY,PIN CONTACT SIZE 8,STRAIGHT POST,PCB

SIZE A2 | CAGE CODE 00779 | DRAWING NO C- 449379 | RESTRICTED TO —

CUSTOMER DRAWING | SCALE 10:1 | SHEET 1 OF 1 | REV C

AMP 1471-9 REV 11JUN97

22-JUL-03 07:54:54 us016412 /home/us016412/docmod

Downloaded from Elcodis.com electronic components distributor