THIS DRAWING IS UNPUBLISHED. RELEASED FOR PUBLICATION .19 .
© COPYRIGHT 19 BY AMP INCORPORATED. ALL RIGHTS RESERVED.

LOC	DIST
DF	DO

REVISIONS

Y	LTR	DESCRIPTION	DATE	DWN	APVD
	C	REV PER 063D-0471-02	6-02	CT	JM

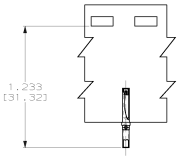

1218267-2 & -4

SCALE 2:1

1. MATERIAL:
BODY: COPPER ALLOY
CLIP: BERYLLIUM COPPER ASTM B 194,
OR AMP ENGINEERING APPROVED EQUIVALENT.

2. FINISH:
BODY: GOLD PLATE .000010 [0.25μm] MIN THICK ON CONTACT BODY,
OVER NICKEL PLATE .000050 [1.27μm] MIN THICK.
CLIP: GOLD PLATE .000050 [1.27μm] MIN THICK
OVER NICKEL PLATE .000100 [2.54μm] MIN THICK.

3. ALL DIMENSIONS SHOWN AFTER PLATING.

4. POINT WHICH A .039 DIAMETER SQUARE ENDED PIN FIRST ENGAGES CLIP TINES.

5. POINT OF PLATING THICKNESS MEASUREMENT.

6. INSPECTION HOLE THRU ONE WALL ONLY
RADIAL LOCATION OPTIONAL.

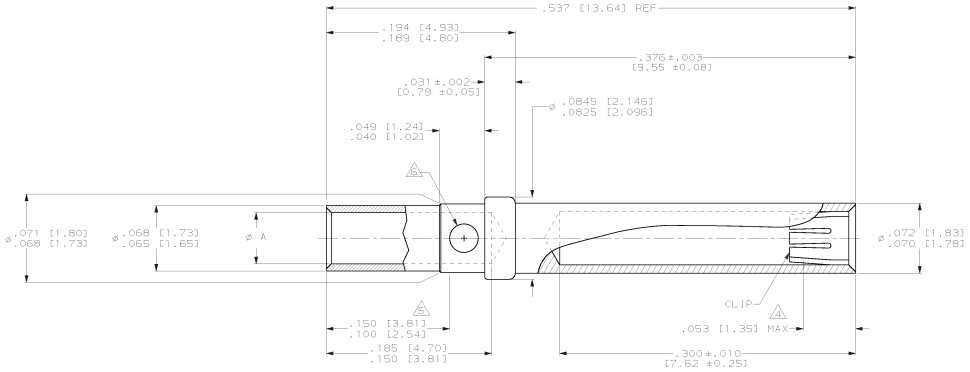

REMARKS	DIM A	FINISH	MATERIAL	PART NUMBER
TAPE MOUNTED 20-24 AWG WIRE	.043-.046 [1.09-1.17]	2	1	1218267-4
LOOSE PIECE 20-24 AWG WIRE	.043-.046 [1.09-1.17]	2	1	1218267-3
TAPE MOUNTED 18 AWG WIRE	.051-.053 [1.30-1.35]	2	1	1218267-2
LOOSE PIECE 18 AWG WIRE	.051-.053 [1.30-1.35]	2	1	1218267-1

THIS DRAWING IS A CONTROLLED DOCUMENT.

DIMENSIONS: INCHES [mm]

TOLERANCES UNLESS OTHERWISE SPECIFIED:
2 PLC ±-
3 PLC ±-
4 PLC ±-
5 PLC ±.005 [0.13]
ANGLES ±2°

MATERIAL: SEE TABLE
FINISH: SEE TABLE

DWN: L. BRANDBERG 06 NOV 96
CHK: D. GRIFFITH 04 DEC 96
APVD: D. GRIFFITH 04 DEC 96
PRODT SPEC: —
APPLICATION SPEC: —
WEIGHT: —
CUSTOMER DRAWING

AMP Incorporated
Harrisburg, PA 17105-3608

NAME: CONTACT, SOCKET, CRIMP TYPE, AMPLIMITE

SIZE: A1 | CAGE CODE: 00779 | DRAWING NO: 1218267 | RESTRICTED TO: —

SCALE: 2:1 | SHEET 1 OF 1 | REV C

AMP 4805 REV 11.XMB7

29-JUN-06 10:15:47 amp16412 /home/amp16412/cadmod

Downloaded from Elcodis.com electronic components distributor