used for: D-SUB COMBINATION

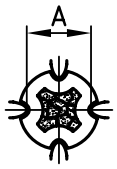

(c)

Selector settings	Crimp height A
7 for AWG 10	2.19 - 2.41
6 for AWG 12	1.94 - 2.05

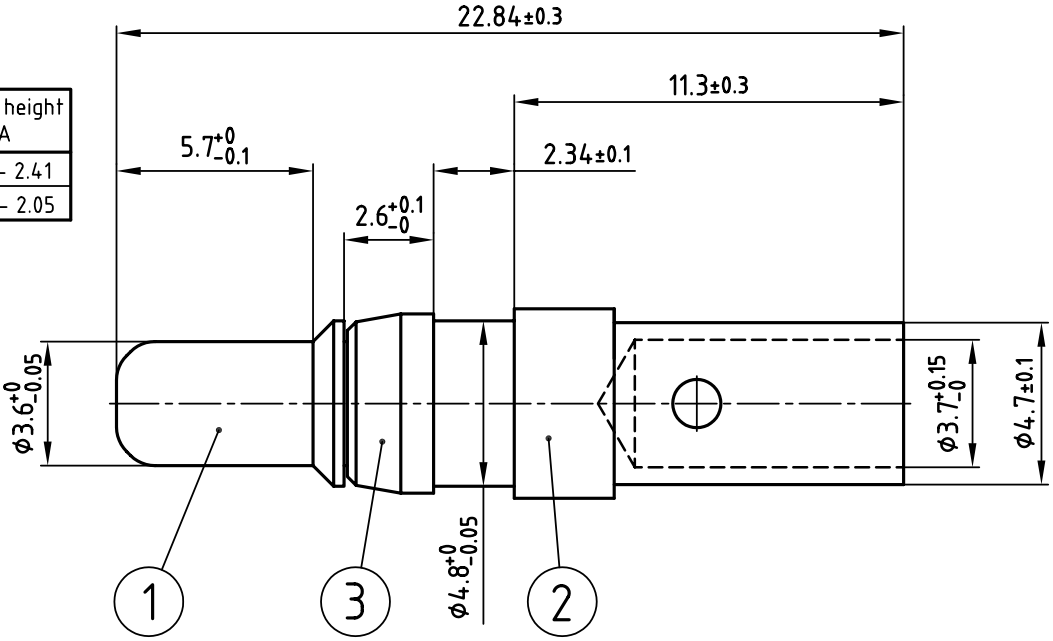

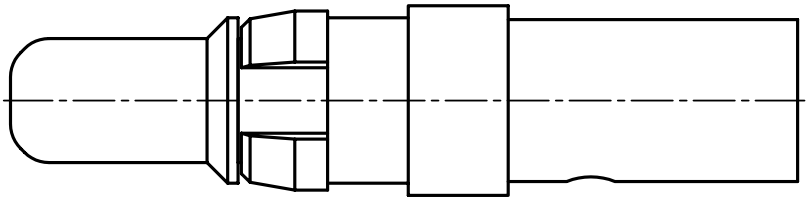

Directive 2002/95/EC „RoHS" Compliant

(b) STRIPPING DIMENSIONS

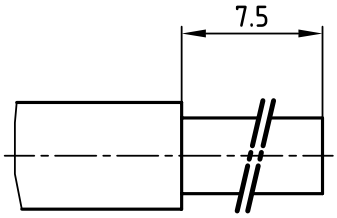

NOTES:

1. MATERIAL: COPPER ALLOY
2. PLATING:
   ITEM 1: min. 30µ" HARD GOLD OVER min. 50µ" NICKEL
   ITEM 2: min. 8µ" HARD GOLD OVER min. 50µ" NICKEL
   ITEM 3: NICKEL PLATED
3. (b) CRIMPING: USE CRIMP TOOL 360X10409X WITH TOOL INSERT 360X20029X
   SELECTOR SETTINGS: 7 FOR AWG 10; 6 FOR AWG 12

THIS DRAWING MAY NOT BE COPIED OR REPRODUCED IN ANY WAY, AND MAY NOT BE PASSED ON TO A THIRD PARTY WITHOUT WRITTEN PERMISSION. OWNERSHIP AND COPYRIGHT OF CONEC GmbH

DO NOT ALTER CAD DRAWING BY HAND

rev.	description	date	name
1 x c	Ä 2197	01.04.2005	Lehmen.
2 x b	Ä 2177	02.03.2005	Lehmen.

tolerance ISO 2768-m

1998	date	name
drawn	23.03.	Barcinski
appd.	23.03.	Mickenbecker
norm		
d-old		

CONEC®

scale: 5:1
material: SEE NOTES

title: HIGH POWER CONTACT MALE
CRIMP VERSION 30A
D-SUB COMBINATION

dwg no: 13K1ID3A
CAD/ REL.13
DIN-A 4
sh:1/2

product no: 131C11039X

Downloaded from Elcodis.com electronic components distributor