DRAWING MADE IN THIRD ANGLE PROJECTION

THIS DRAWING IS UNPUBLISHED. RELEASED FOR PUBLICATION .19 .

© COPYRIGHT 19 BY AMP INCORPORATED. ALL INTERNATIONAL RIGHTS RESERVED.

MOD	LOC	DIST
22	BD	39

REVISIONS				
ZONE	LTR	DESCRIPTION	DATE	APPD
	B	REDRAWN	3/23/90	–

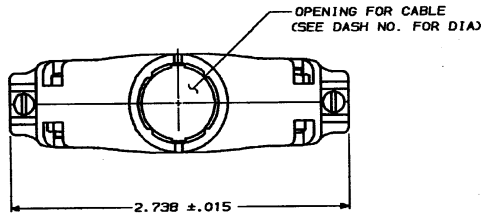

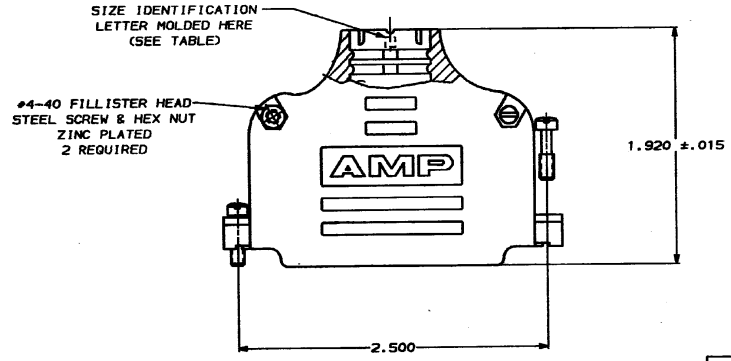

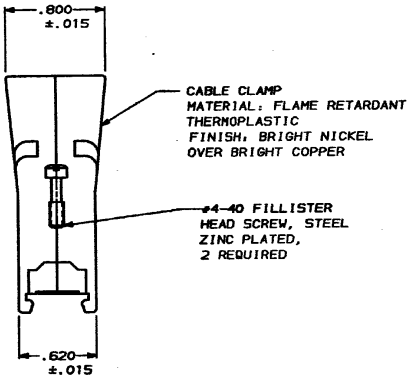

REMARKS	SIZE IDENT	CABLE DIA	BULK PACKED KIT NO. 3	INDIVIDUAL KIT NO. 2
1	P	.530		1-747100-1
	F	.350	1-747100-0 4	747100-9
	J	.425	747100-8 4	747100-7
	N	.500	747100-6 4	747100-5
	R	.575	747100-4 4	747100-3
	T	.650	747100-2 4	747100-1

1. ALL PARTS PACKAGED UNASSEMBLED.
2. AS SHOWN ABOVE THIS KIT CONSISTS OF 2 STRAIN RELIEF HALVES, 2 #4-40 SCREWS, 2 #4-40 NUTS & 2 #4-40 MOUNTING SCREWS.
3. SAME AS SHOWN EXCEPT: EACH PART IS INDIVIDUALLY BULK PACKED FOR MULTIPLE KIT ORDERS.
4. OBSOLETE.

DO NOT SCALE PRINT.
UNLESS SPECIFIED
DIMENSIONS IN INCHES
TOLERANCES ON :
2 PLC DEC ± –
3 PLC DEC ± .005
ANGLES ± –

MATERIAL: SEE CALLOUT

FINISH: SEE CALLOUT

DR 7/23/90 A.STAUB BG
CHK 9-10-90
APPD 9-10-90
APPD 9/10/90
PRODUCT SPEC –
APPLICATION SPEC –
WEIGHT –

AMP INCORPORATED
Harrisburg, Pa. 17105

NAME: CABLE CLAMP KIT, SIZE 4, 37 POSITION, 180° AMPLIMITE™ SERIES, PLATED PLASTIC

SIZE C | FSCM NO 00779 | DRAWING NO 747100

SCALE 4:1 | SHEET 1 OF 1

CUSTOMER DRAWING

747100

Downloaded from Elcodis.com electronic components distributor