THIS DRAWING IS UNPUBLISHED. RELEASED FOR PUBLICATION -.-.-.
© COPYRIGHT — BY TYCO ELECTRONICS CORPORATION. ALL RIGHTS RESERVED.

USE	DIST
GP	00

REVISIONS

P	LTR	DESCRIPTION	DATE	DWN	APVD
	C	REVISED PER EC 0513-0512-03	03MAR04	BM	JG

1 THIS PART WILL FIT ANY SIZE 3 PLUG OR RECEPTACLE IN THE AMPLIMITE SERIES .

2 ALL PARTS ARE PACKAGED UNASSEMBLED.

3 ONE KIT PER POLY BAG.

4 SAME AS –1 EXCEPT BULK PACKAGED.

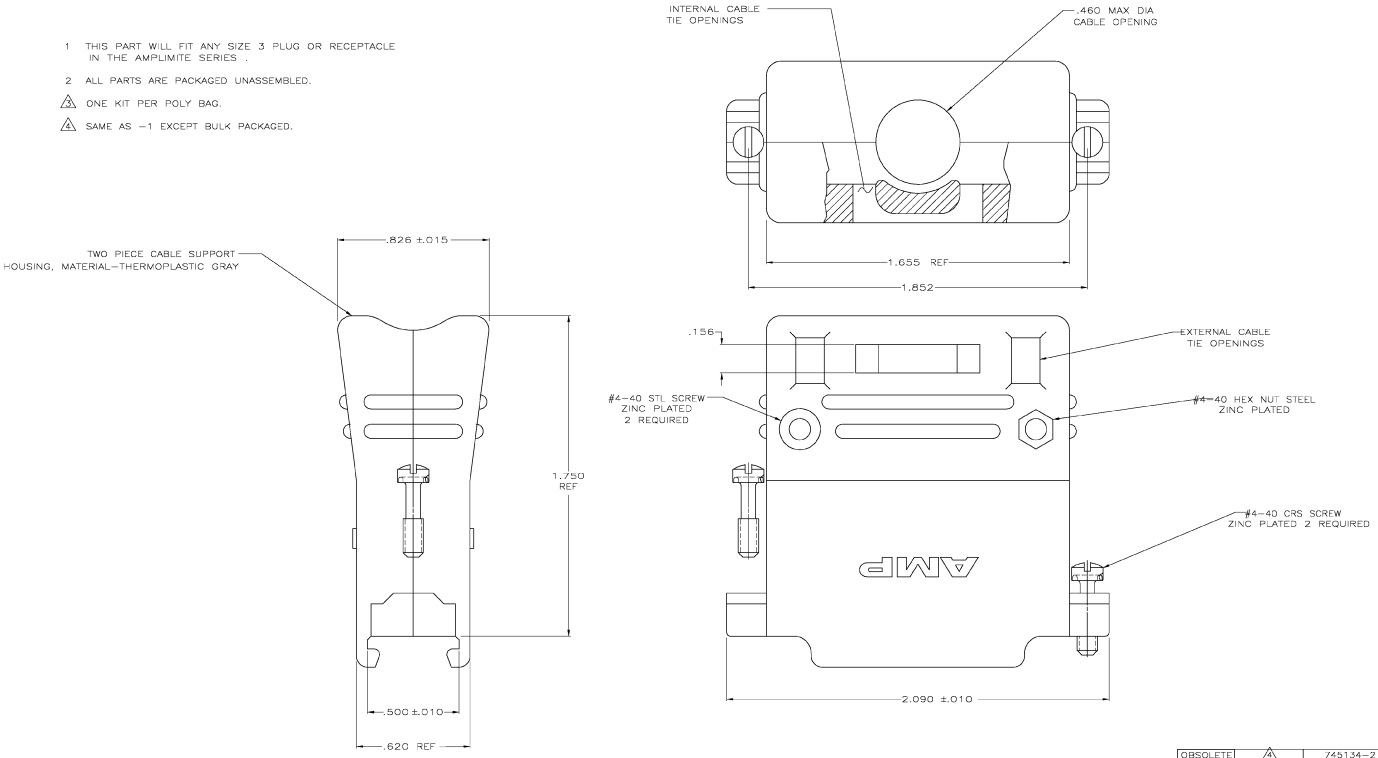

OBSOLETE	4	745134–2
	3	745134–1
PACKAGING		PART NUMBER

THIS DRAWING IS A CONTROLLED DOCUMENT.

DRN B. MCMASTER DRAWER
SIZE C. ROHDE DRAWER
APVD M. MAUNGLEY DRAWER

DIMENSIONS: INCHES

TOLERANCES UNLESS OTHERWISE SPECIFIED
D PLC ± –
C PLC ± –
B PLC ± –
A PLC ± .005
ANG ± –
FINISH ±

MATERIAL SEE CALLOUT

FINISH SEE CALLOUT

Tyco Electronics Corporation
Harrisburg, Pa 17105-3608

NAME CABLE SUPPORT ASSEMBLY, SIZE 3, 25 POSITION, AMPLIMITE™ HD-20

PRODUCT SPEC —
APPLICATION SPEC —
WEIGHT —

SIZE A1 CAGE CODE 00779 DRAWING NO C-745134 RESTRICTED TO —

CUSTOMER DRAWING SCALE 4:1 SHEET 1 OF 1 REV C

AMP 40825 REV 31MAR2000

Downloaded from Elcodis.com electronic components distributor