THIS DRAWING IS UNPUBLISHED. RELEASED FOR PUBLICATION -.-.-
© COPYRIGHT - BY TYCO ELECTRONICS CORPORATION. ALL RIGHTS RESERVED.

LOC	CONT
GP	00

REVISIONS

P	LTR	DESCRIPTION	DATE	DWN	APVD
	C	REDRAWN PER EC 0513-0148-04	03MAR05	TS	JG

1. MATERIAL:
   HERMAPHRODITIC BACKSHELL– STEEL.
   SPRING LATCH– STAINLESS STEEL.
   HERMAPHRODITIC SPRING LATCH COVER– UL 94V-0 RATED
   ABS MOLDING COMPOUND, COLOR–BLACK.
2. PLATING:
   HERMAPHRODITIC BACKSHELL– 5μm MIN BRIGHT NICKEL OVER 2.5μm MIN COPPER.
3. RECOMMENDED WIRE: 30 AWG WITH A 0.56–0.64 INSULATION DIAMETER, WIRE MUST BE APPROVED BY AMP ENGINEERING.

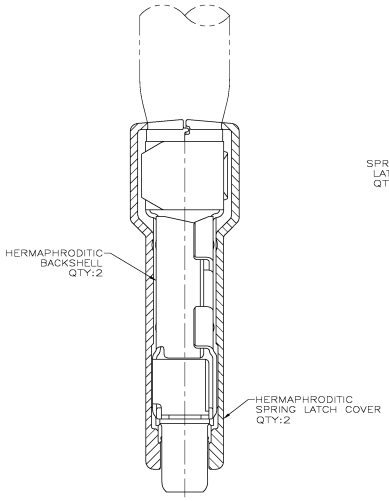

SECTION A–A

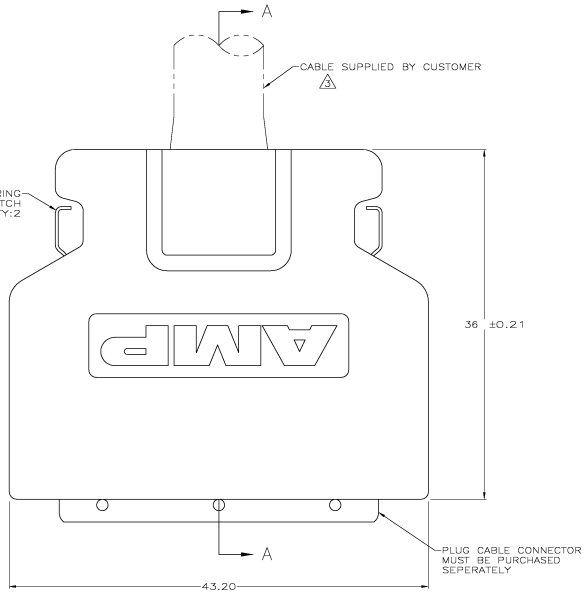

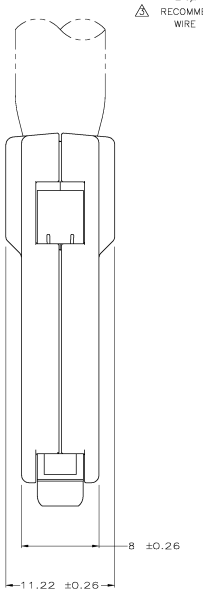

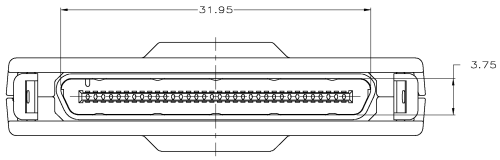

OBSOLETE	INDIVIDUAL KIT	787229-2
	BULK, 100 KITS	787229-1
	PACKAGING	PART NUMBER

THIS DRAWING IS A CONTROLLED DOCUMENT.

DIMENSIONS: mm

TOLERANCES UNLESS OTHERWISE SPECIFIED: 0 PLC ± –; 1 PLC ± –; 2 PLC ± 0.13; 3 PLC ± –; 4 PLC ± –; ANGLES ± –

MATERIAL 1 FINISH 2

DWN J SHUEY 03MAR05
CHK J GERACE 03MAR05
APVD M MALWALEY 03MAR05

PRODUCT SPEC 108-1471
APPLICATION SPEC –
WEIGHT –

Tyco Electronics Corporation
Harrisburg, Pa 17105-3608

NAME BACKSHELL KIT, SQUEEZE TO RELEASE, 68 POSITION, CABLE CONNECTOR, 0.8mm, CHAMP

SIZE A1 CAGE CODE 00779 DRAWING NO C-787229 RESTRICTED TO –

CUSTOMER DRAWING SCALE 5:1 SHEET 1 OF 1 REV C

AMP 4895 REV 31MAR2000

Downloaded from Elcodis.com electronic components distributor